Base Mounted

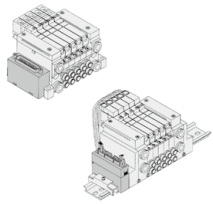

Manifold type	Series	D-sub connector	Flat ribbon cable	Connector	Serial
Plug-in	10-/21-VQ1000	●	●	—	●
	10-/21-VQ2000	●	●	—	●

Series 10-21-VQ1000 Base Mounted Plug-in Unit

Note) For CE compliant models, DC-type only.

[Option]

How to Order Manifold

10 – VV5Q 1 1 – 08 C6 F U1 – □ – □

Series

1	VQ1000

Manifold

1	Plug-in unit

10	Clean series
21	Copper/Fluorine/Silicone free + Low particle generation

Stations

01	1 station
⋮	⋮

The number of max. stations differs from kit to kit. (Refer to the table below.)

Kit type

CE compliant

Nil	—
Q	CE compliant

Note) For CE compliant models, DC-type only.

Option

Symbol	Option
Nil	None
2	200/220 VAC models (F/L kit only)
B Note 2)	With back pressure check valve
D	DIN rail mounting
D0	With DIN rail bracket (Without DIN rail)
D□ Note 5)	With ejector unit
K Note 3)	Special wiring spec. (Except double wiring)
N	With name plate
R Note 4)	External pilot

Note 1) When two or more symbols are specified, indicate them alphabetically. Example: -BNR
Note 2) Models with a suffix "-B" have check valves for prevention of back pressure at all manifold stations. When a back pressure check valve is desired, and is to be installed only in certain manifold stations, specify the mounting position by means of the manifold specification sheet.
Note 3) Specify the wiring specifications by means of the manifold specification sheet. (Except L kit)
Note 4) Indicate "R" for the valve with external pilot.
Note 5) □: Station. Example: D08: The number of stations that may be displayed is longer than the manifold number of stations.

Cylinder port

Symbol	Port size
C3	With ø3.2 One-touch fitting
C4	With ø4 One-touch fitting
C6	With ø6 One-touch fitting
M5	M5 thread
CM Note 1)	Mixed sizes and with port plug
L3	Top ported elbow with ø3.2 One-touch fitting
L4	Top ported elbow with ø4 One-touch fitting
L6	Top ported elbow with ø6 One-touch fitting

Symbol	Port size
L5	Top ported elbow M5 thread
B3	Bottom ported elbow with ø3.2 One-touch fitting
B4	Bottom ported elbow with ø4 One-touch fitting
B6	Bottom ported elbow with ø6 One-touch fitting
B5	Bottom ported elbow M5 thread
LM Note 1)	Elbow port, mixed sizes
MM Note 2)	Mixed size for different types of piping, option installed

Note 1) Indicate "Mixed sizes and with port plug" by means of the manifold specification sheet.
Note 2) When selecting the mixed size for different types of piping or dual flow fitting assembly, enter "MM" and give instructions on the manifold specification sheet.
Note 3) Inch-size One-touch fittings are also available. Refer to page 563 for details.
Note 4) M5 fittings for M5 thread are attached without being incorporated.

Simple specials are available with SMC Simple Specials System.
Refer to the **WEB catalog** for details on applicable models.

Kit type/Electrical entry/Cable length

F kit (D-sub connector)

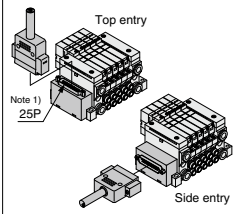

P. 523

Connector entry direction					
Top entry		Side entry			
F kit	U0	F kit	S0	Without cable	Note 2) 2 to 24 stations
	U1		S1	With cable (1.5 m)	
	U2		S2	With cable (3 m)	
	U3		S3	With cable (5 m)	

P kit (Flat ribbon cable)

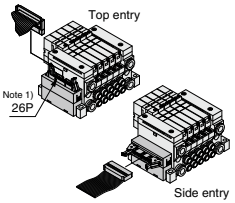

P. 527

Connector entry direction					
Top entry		Side entry			
P kit	U0	P kit	S0	Without cable	Note 2) 2 to 24 stations
	U1		S1	With cable (1.5 m)	
	U2		S2	With cable (3 m)	
	U3		S3	With cable (5 m)	

Note 1) Besides the above, F/P kit with different number of pins are available. Refer to page 561 for details.
Note 2) Refer to page 562 for details.

How to Order Valve

Note) For CE compliant models, DC-type only. CE [Option]

10 – VQ 1 1 0 0 □ – 5 □ □ 1 – □

Series

1	VQ1000

10	Clean series
21	Copper/Fluorine/Silicone free + Low particle generation

Actuation type

1		2-position single
2	Metal	2-position double
2	Rubber	2-position double
3		3-position closed center
4		3-position exhaust center
5		3-position pressure center

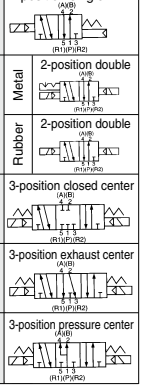

Seal

0	Metal seal
1	Rubber seal

Function

Symbol	Specifications	DC	AC
Nil	Standard	(0.4 W) ○	○ Note 1)
B	High-speed response type	(0.95 W) ○	—
K Note 2)	High-pressure type (1.0 MPa)	(0.95 W) ○	—
N Note 3)	Negative common	○	—
R Note 3)	External pilot	○	○

Note 1) Refer to page 522 for power consumption of AC type.
Note 2) Metal seal only
Note 3) For external pilot and negative common specifications, refer to "Semi-standard" on pages 562 to 563.
Note 4) When two or more symbols are specified, indicate them alphabetically. Combination of [B] and [K] is not possible.

Coil voltage

		CE compliant
1	100 VAC (50/60 Hz)	—
2 Note)	200 VAC (50/60 Hz)	—
3	110 VAC (50/60 Hz)	—
4 Note)	220 VAC (50/60 Hz)	—
5	24 VDC	●
6	12 VDC	●

Note) 200 and 220 VAC: F/L kit only

CE compliant

Nil	—
Q	CE compliant

Note) For CE compliant models, DC-type only.

Manual override

Nil: Non-locking push type (Tool required)	B: Locking type (Tool required)
C: Locking type (Manual)	D: Slide locking type (Manual)

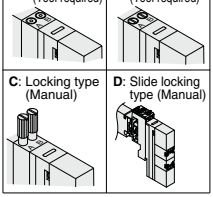

Light/surge voltage suppressor

Nil	Yes
E Note)	None

Note) Not applicable to the S kit.

How to Order Manifold Assembly

Example

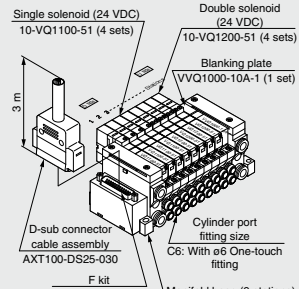

10-VV5Q11-09C6FU2 ··· 1 set (F kit 9-station manifold base part no.)
***10-VQ1100-51 ····· 4 sets (Single solenoid part no.)**
***10-VQ1200-51 ····· 4 sets (Double solenoid part no.)**
***VVQ1000-10A-1 ···· 1 set (Blanking plate part no.)**
→ The asterisk denotes the symbol for assembly. Prefix it to the part no. of the solenoid valve, etc.

Specify the part numbers for valves and options together beneath the manifold base part number. Besides, when the arrangement will be complicated, specify them by means of the manifold specification sheet.

⚠Caution

Use the standard (DC) specification when continuously energizing for long periods of time.

T kit (Terminal block box)

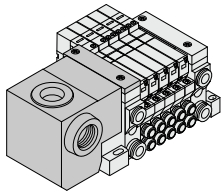

P. 539

T kit	0	Terminal block box	2 to 24 stations Note 2)

L kit (Lead wire)

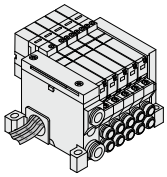

P. 543

L kit	0	With cable (0.6 m)	1 to 8 stations
	1	With cable (1.5 m)	
	2	With cable (3 m)	

S kit (Serial transmission)

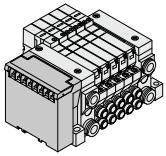

The valve is equipped with an indicator light and surge voltage suppressor, and the voltage is 24 VDC. The dust proof SI unit is also available. Refer to page 551 for details.

Note) Refer to "SI Unit Part No." on page 551 when ordering the CE-compliant SI unit.

P. 551

S kit	0	Without SI unit	Note 2) Max.16 stations
	H	NKE Corp.: Fieldbus H System	
	Q	DeviceNet™	Max.16 stations
	R1	OMRON Corp.: CompoBus/S (16 outputs)	
	R2	OMRON Corp.: CompoBus/S (8 outputs)	Max. 8 stations
	V	CC-Link	Max. 16 stations
	ZB	CompoNet™ (Positive common)	
	ZBN	CompoNet™ (Negative common)	

Series 10-21-VQ2000 Base Mounted Plug-in Unit

Note) For CE compliant models, DC-type only.

[Option]

How to Order Manifold

10 –VV5Q 2 1 – 08 C6 F U1 – □ – □

Series

2	VQ2000

Manifold

1	Plug-in unit

10	Clean series
21	Copper/Fluorine/ Silicone free + Low particle generation

CE compliant

Nil	—
Q	CE compliant

Note) For CE compliant models, DC-type only.

Option

Symbol	Option
Nil	None
2	200/220 VAC models (F/L kit only)
B Note 2)	With back pressure check valve
D	DIN rail mounting
D0	With DIN rail bracket (Without DIN rail)
D□ Note 5)	DIN rail length specified
K Note 3)	Special wiring spec. (Except double wiring)
N	With name plate
R Note 4)	External pilot

Note 1) When two or more symbols are specified, indicate them alphabetically. Example: -DNR
Note 2) Models with a suffix "-B" have check valves for prevention of back pressure at all manifold stations. When a back pressure check valve is desired, and is to be installed only in certain manifold stations, specify the mounting position by means of the manifold specification sheet.
Note 3) Specify the wiring specifications by means of the manifold specification sheet. (Except L kit)
Note 4) Indicate "R" for the valve with external pilot.
Note 5) □: Station. Example: D08: The number of stations that may be displayed is longer than the manifold number of stations.

Stations

01	1 station
⋮	⋮

The maximum and minimum number of stations are varied depending on kit. (Refer to the below table.)

Cylinder port

Symbol	Port size
C4	With ø4 One-touch fitting
C6	With ø6 One-touch fitting
C8	With ø8 One-touch fitting
CM Note 1)	Mixed sizes and with port plug
L4	Top ported elbow with ø4 One-touch fitting
L6	Top ported elbow with ø6 One-touch fitting

Kit type

Symbol	Port size
L8	Top ported elbow with ø8 One-touch fitting
B4	Bottom ported elbow with ø4 One-touch fitting
B6	Bottom ported elbow with ø6 One-touch fitting
B8	Bottom ported elbow with ø8 One-touch fitting
LM Note 1)	Elbow port, mixed sizes
MM Note 2)	Mixed size for different types of piping, option installed

Note 1) Indicate "Mixed size and with port plug" by means of the manifold specification sheet.
Note 2) When selecting the mixed size for different types of piping, dual flow fitting assembly, or double check block (direct mounting), enter "MM" and give instructions on the manifold specification sheet.
Note 3) Inch-size One-touch fittings are also available. Refer to page 563 for details.

Simple specials are available with SMC Simple Specials System.
Refer to the **WEB catalog** for details on applicable models.

Kit type/Electrical entry/Cable length

F kit (D-sub connector)

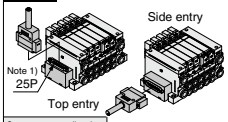

Connector entry direction					
Top entry		Side entry			
F kit	U0	F kit	S0	Without cable	Note 2) 2 to 24 stations
	U1		S1	With cable (1.5 m)	
	U2		S2	With cable (3 m)	
	U3		S3	With cable (5 m)	

P. 523

P kit (Flat ribbon cable)

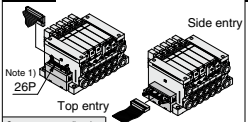

Connector entry direction					
Top entry		Side entry			
P kit	U0	P kit	S0	Without cable	Note 2) 2 to 24 stations
	U1		S1	With cable (1.5 m)	
	U2		S2	With cable (3 m)	
	U3		S3	With cable (5 m)	

P. 527

T kit (Terminal block box)

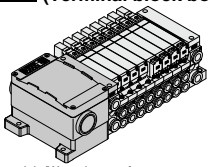

Dust-tight/Water-jet-proof (IP65) compatible Note 3)

P. 539

T kit	0	Terminal block box	2 to 20 stations Note 2)

L kit (Lead wire)

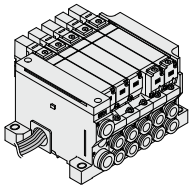

Dust-tight/Water-jet-proof (IP65) compatible Note 3)

P. 543

L kit	0	With cable (0.6 m)	1 to 8 stations
	1	With cable (1.5 m)	
	2	With cable (3 m)	

S kit (Serial transmission) Note 4)

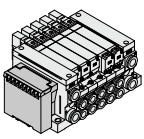

The valve is equipped with an indicator light and surge voltage suppressor, and the voltage is 24 VDC. The dusttight SI unit is available. Refer to page 551 for details. Dust-tight, Water-jet-proof (IP65) is available. Note 3)

Note) Refer to "SI Unit Part No." on page 551 when ordering the CE-compliant SI unit.

P. 551

S kit	0	Without SI unit	Note 2) Max.16 stations
	H	NKE Corp.: Fieldbus H System	
	Q	DeviceNet™	Max.16 stations
	R1	OMRON Corp.: CompoBus/S (16 outputs)	
	R2	OMRON Corp.: CompoBus/S (8 outputs)	Max. 8 stations
	V	CC-Link	Max. 16 stations

M kit (Circular-connector)

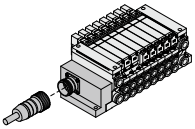

Dust-tight/Water-jet-proof (IP65) compatible Note 3)

P. 557

M kit	0	Without cable	Note 2) 2 to 24 stations
	1	With cable (1.5 m)	
	2	With cable (3 m)	
	3	With cable (5 m)	

Note 1) Besides the above, F/P kit with different number of pins are available. Refer to page 561 for details.
Note 2) Refer to page 562 for details.
Note 3) Refer to the pages on respective kits for IP65 type. (T/L/S/M kit)
Note 4) Serial transmission system with IP65 enclosure applicable to input/output is also available. Refer to page 555 for details.

How to Order Valve

Note) For CE compliant models, DC-type only. [Option]

10 –VQ 2 1 0 0 – 5 1 –

Series

2	VQ2000

10	Clean series
21	Copper/Fluorine/Silicone free + Low particle generation

Actuation type

1		2-position single (A)(B) 4(P) 5(R1) 1(R2)
2	Metal	2-position double (A) (B) 4(P) 5(R1) 1(R2)
	Rubber	2-position double (A)(B) 4(P) 5(R1) 1(R2)
3		3-position closed center (A)(B) 4(P) 5(R1) 1(R2)
4		3-position exhaust center (A)(B) 4(P) 5(R1) 1(R2)
5		3-position pressure center (A)(B) 4(P) 5(R1) 1(R2)

Note) For sub-plate single unit type, refer to page 560.

Seal

0	Metal seal
1	Rubber seal

Function

Symbol	Specifications	DC	AC
Nil	Standard	(0.4 W) ○	○ Note 1)
B	High-speed response type	(0.95 W) ○	—
K Note 2)	High-pressure type (1.0 MPa)	(0.95 W) ○	—
N Note 3)	Negative common	○	—
R Note 3)	External pilot	○	○

Note 1) For power consumption of AC type, refer to page 522.
Note 2) Metal seal only
Note 3) For external pilot and negative common specifications, refer to "Semi-standard" on pages 562 to 563.
Note 4) When two or more symbols are specified, indicate them alphabetically. Combination of [B] and [K] is not possible.

Light/surge voltage suppressor

Nil	Yes
E Note)	None

Note) Not applicable to the S kit.

Coil voltage

		CE compliant
1	100 VAC (50/60 Hz)	—
2 Note)	200 VAC (50/60 Hz)	—
3	110 VAC (50/60 Hz)	—
4 Note)	220 VAC (50/60 Hz)	—
5	24 VDC	●
6	12 VDC	●

Note) 200 and 220 VAC: F/L kit only

CE compliant

Nil	—
Q	CE compliant

Note) For CE compliant models, DC-type only.

Enclosure

Nil	—
W Note)	Dust-tight/water-jet-proof type (IP65)

Note) T, L, S and M kits only

Manual override

Nil: Non-locking push type (Tool required)

B: Push-locking slotted type (Tool required)

C: Locking type (Manual)

D: Slide locking type (Manual)

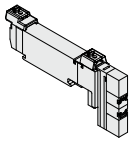

How to Order Manifold Assembly

Example

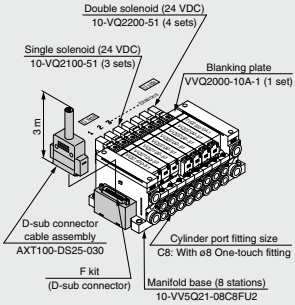

10-VV5Q21-08C8FU2 ··· **1 set** (F kit 8-station manifold base part no.)
***10-VQ2100-51** ····· **3 sets (Single solenoid part no.)**
***10-VQ2200-51** ····· **4 sets (Double solenoid part no.)**
***VVQ2000-10A-1** ···· **1 set (Blanking plate part no.)**

The asterisk denotes the symbol for assembly. Prefix it to the part no. of the solenoid valve, etc.

Specify the part numbers for valves and options together beneath the manifold base part number. Besides, when the arrangement will be complicated, specify them by means of the manifold specification sheet.

⚠Caution

Use the standard (DC) specification when continuously energizing for long periods of time.

10-21-VQ1000: Manifold Options

P. 571 to 572

Blanking plate assembly
VVQ1000-10A-1

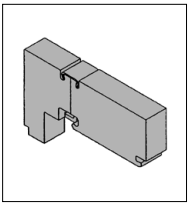

Individual SUP spacer
VVQ1000-P-1-C6/N7

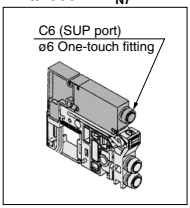

Individual EXH spacer
VVQ1000-R-1-C6/N7

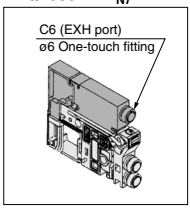

SUP block plate
VVQ1000-16A

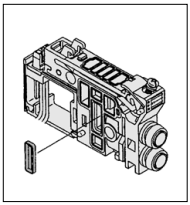

EXH block base assembly
VVQ1000-19A-P□/R□/L□ (C3, C4, C6, M5, N1, N3, N7)

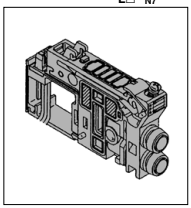

Back pressure check valve assembly [-B]
VVQ1000-18A

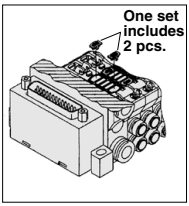

Name plate [-N]
VVQ1000-N/NC-Station
(1 to Max. stations)

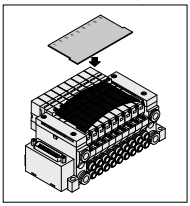

Blanking plug
KQ2P-□

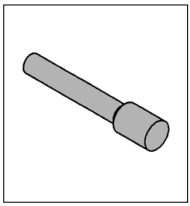

DIN rail mounting bracket
[-D/-D0/-D□]
VVQ1000-57A

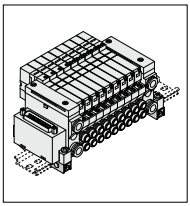

10-21-VQ2000: Manifold Options

P. 573 to 574

Blanking plate assembly
VVQ2000-10A-1

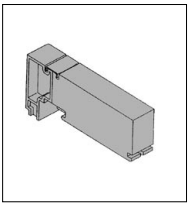

Individual SUP spacer
VVQ2000-P-1-C8/N9

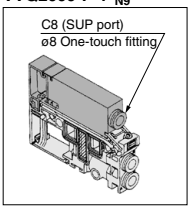

Individual EXH spacer
VVQ2000-R-1-C8/N9

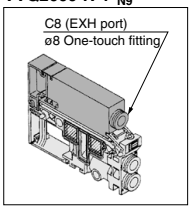

SUP block plate
VVQ2000-16A

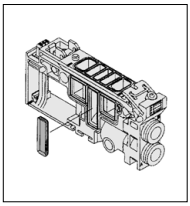

EXH block plate
VVQ2000-19A

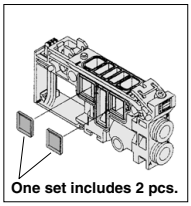

Back pressure check valve assembly [-B]
VVQ2000-18A

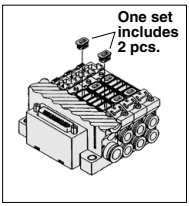

Name plate [-N]
VVQ2000-N-Station
(1 to Max. stations)

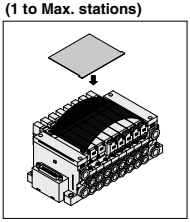

Blanking plug
KQ2P-□

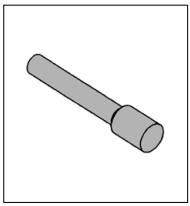

DIN rail mounting bracket
[-D/-D0/-D□]
VVQ2000-57A

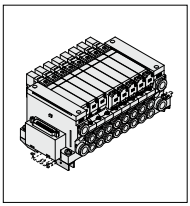

Series 10-/21-VQ1000/2000 Base Mounted Plug-in Unit

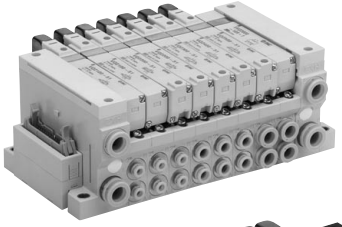
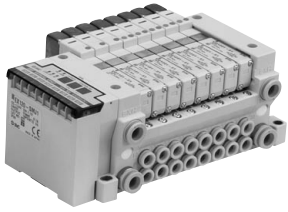
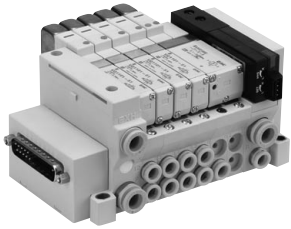
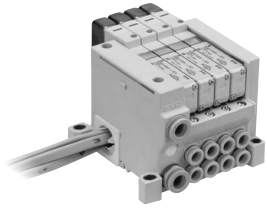

Model

Series	Actuation type		Model		Flow rate characteristics Note 1)						Response time (ms) Note 2)			Weight (g)
					1 → 2/4 (P → A/B)			2/4 → 3/5 (A/B → R1/R2)			Standard: 0.4 W	High-speed response: 0.95 W	AC	
					C [dm³/(s·bar)]	b	Cv	C [dm³/(s·bar)]	b	Cv				
VQ1000	2-position	Single	Metal seal	10-/21-VQ1100	0.70	0.15	0.16	0.72	0.25	0.18	15 or less	12 or less	29 or less	67
			Rubber seal	10-/21-VQ1101	0.85	0.20	0.21	1.0	0.30	0.25	20 or less	15 or less	34 or less	
		Double	Metal seal	10-/21-VQ1200	0.70	0.15	0.16	0.72	0.25	0.18	13 or less	10 or less	13 or less	77
			Rubber seal	10-/21-VQ1201	0.85	0.20	0.21	1.0	0.30	0.25	20 or less	15 or less	20 or less	
	3-position	Closed center	Metal seal	10-/21-VQ1300	0.68	0.15	0.16	0.72	0.25	0.18	26 or less	20 or less	40 or less	
			Rubber seal	10-/21-VQ1301	0.70	0.20	0.16	0.65	0.42	0.18	33 or less	25 or less	47 or less	
		Exhaust center	Metal seal	10-/21-VQ1400	0.68	0.15	0.16	0.72	0.25	0.18	26 or less	20 or less	40 or less	
			Rubber seal	10-/21-VQ1401	0.70	0.20	0.16	1.0	0.30	0.25	33 or less	25 or less	47 or less	
		Pressure center	Metal seal	10-/21-VQ1500	0.70	0.15	0.16	0.72	0.25	0.18	26 or less	20 or less	40 or less	
			Rubber seal	10-/21-VQ1501	0.85	0.20	0.21	0.65	0.42	0.18	33 or less	25 or less	47 or less	
VQ2000	2-position	Single	Metal seal	10-/21-VQ2100	2.0	0.15	0.46	2.6	0.15	0.60	29 or less	22 or less	49 or less	95
			Rubber seal	10-/21-VQ2101	2.2	0.28	0.55	3.2	0.30	0.80	31 or less	24 or less	51 or less	
		Double	Metal seal	10-/21-VQ2200	2.0	0.15	0.46	2.6	0.15	0.60	20 or less	15 or less	20 or less	105
			Rubber seal	10-/21-VQ2201	2.2	0.28	0.55	3.2	0.30	0.80	26 or less	20 or less	26 or less	
	3-position	Closed center	Metal seal	10-/21-VQ2300	2.0	0.15	0.46	2.0	0.18	0.46	38 or less	29 or less	58 or less	
			Rubber seal	10-/21-VQ2301	2.0	0.28	0.49	2.2	0.31	0.60	44 or less	34 or less	64 or less	
		Exhaust center	Metal seal	10-/21-VQ2400	2.0	0.15	0.46	2.6	0.15	0.60	38 or less	29 or less	58 or less	
			Rubber seal	10-/21-VQ2401	2.0	0.28	0.49	3.2	0.30	0.80	44 or less	34 or less	64 or less	
		Pressure center	Metal seal	10-/21-VQ2500	2.4	0.17	0.57	2.0	0.18	0.46	38 or less	29 or less	58 or less	
			Rubber seal	10-/21-VQ2501	3.2	0.28	0.80	2.2	0.31	0.60	44 or less	34 or less	64 or less	

Note 1) The values are given for port size C6: (10-VQ1000), C8: (10-VQ2000) without back pressure check valve.
Note 2) As per JIS B 8375-1981 (Supply pressure 0.5 MPa; with indicator light/surge voltage suppressor; clean air
The response time is subject to the pressure and quality of the air.) The values at the time of ON are given for double types.

Symbol

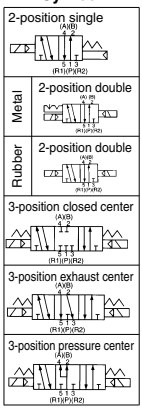

Standard Specifications

			Metal seal	Rubber seal
Valve specifications	Valve type		Metal seal	Rubber seal
	Fluid		Air, Inert gas	Air, Inert gas
	Maximum operating pressure		0.7 MPa (High-pressure type: 1.0 MPa)	0.7 MPa
	Minimum operating pressure	Single	0.1 MPa	0.15 MPa
		Double	0.1 MPa	0.1 MPa
		3-position	0.1 MPa	0.2 MPa
		4-position	———	0.15 MPa
	Ambient and fluid temperature		–10 to 50°C Note 1)	
	Lubrication		Not required	
	Manual override		Push type, Locking type (Tool required, Manual) semi-standard	
	Impact/Vibration resistance Note 2)		150/30 m/s²	
	Enclosure		Dust-protected; Dust-tight, Water-jet-proof (IP65) Note 4)	
Electrical specifications	Coil rated voltage		12 , 24 VDC, 100, 110, 200, 220 VAC (50/60 Hz)	
	Allowable voltage fluctuation		±10% of rated voltage	
	Coil insulation type		Equivalent to Class B	
	Power consumption (Current)	24 VDC	0.4 W DC (17 mA), 0.95 W DC (40 mA) Note 3)	
		12 VDC	0.4 W DC (34 mA), 0.95 W DC (80 mA) Note 3)	
		100 VAC	Inrush 0.96 VA (10 mA), Holding 0.96 VA (10 mA)	
		110 VAC	Inrush 1.0 VA (9 mA), Holding 1.0 VA (9 mA)	
		200 VAC	Inrush 1.26 VA (6 mA), Holding 1.26 VA (6 mA)	
		220 VAC	Inrush 1.38 VA (6 mA), Holding 1.38 VA (6 mA)	

Note 1) Use dry air to prevent condensation when operating at low temperatures.
Note 2) Impact resistance ····· No malfunction occurred when it was tested in the axial direction and at right angles to the main valve and armature in both energized and de-energized states once for each condition. (Default settings)
Vibration resistance ··· No malfunction occurred in a one-sweep test between 45 and 2000 Hz. Test was performed in both energized and de-energized states in the axial direction and at right angles to the main valve and armature. (Default settings)
Note 3) Value for high-speed response, high-voltage type (0.95 W)
Note 4) Dust-tight, Water-jet-proof (IP65) is available on T/L/S/M kit of the VQ2000.

Manifold Specifications

Series	Base model	Connection type	Piping specifications: Piping direction	Port size Note 1): 1(P), 3(R)	Port size Note 1): 4(A), 2(B)	Applicable stations Note 2)	Applicable solenoid valve	5-station weight (g)
10-21-VQ1000	VV5Q11-□□□	F kit–D-sub connector P kit–Flat ribbon cable T kit–Terminal block box L kit–Lead wire S kit–Serial transmission	Side	C8 (ø8) Option: Direct EXH outlet with built-in silencer	C3 (ø3.2) C4(ø4) C6 (ø6) M5 (M5 thread)	F/P/T kit (2 to 24 stations) J/G/S kit (2 to 16 stations) L kit (1 to 8 stations)	VQ1□00 VQ1□01	643 (Single) 754 (Double, 3-position)
10-21-VQ2000	VV5Q21-□□□	F kit–D-sub connector P kit–Flat ribbon cable T kit–Terminal block box L kit–Lead wire S kit–Serial transmission M kit–Circular connector	Side	C10 (ø10) Option: Direct EXH outlet with built-in silencer	C4 (ø4) C6 (ø6) C8 (ø8)	F/P kit (2 to 24 stations) J/G/S kit (2 to 16 stations) L kit (1 to 8 stations) T kit (2 to 20 stations)	VQ2□00 VQ2□01	1076 (Single) 1119 (Double, 3-position)

Note 1) Inch-size One-touch fittings are also available. Refer to page 563 for details.
Note 2) Refer to page 562 for details.

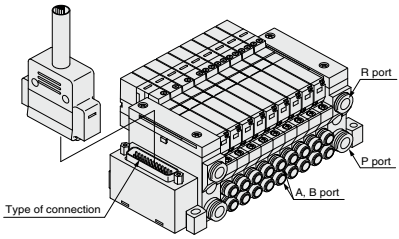

10-21-VV5Q11

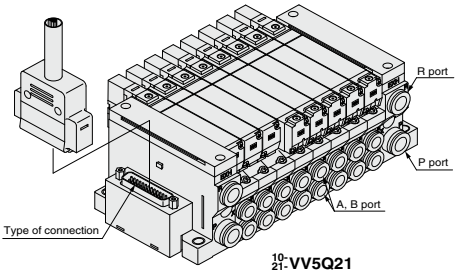

10-21-VV5Q21

F Series 10-/21- VQ1000/2000
Kit (D-sub connector)

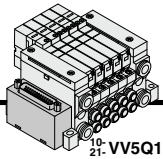
10-/21- VV5Q11

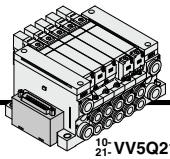
10-/21- VV5Q21

- **D-sub connector reduces installation labor for electrical connections.**
- **Using the D-sub connector (25P), (15P as semi-standard) conforming to MIL standard permits the use of commercial connectors and gives a wide interchangeability.**
- **Top or side receptacle position can be selected in accordance with the available mounting space.**
- **Maximum stations are 24.**

Manifold Specifications

Series	Piping specifications			Applicable stations
	Piping direction	Port size		
		1(P), 3(R)	4(A), 2(B)	
10-/21- VQ1000	Side	C8	C3, C4, C6, M5	Max. 24 stations
10-/21- VQ2000	Side	C10	C4, C6, C8	Max. 24 stations

D-sub Connector (25 Pins)

Cable Assembly ●

AXT100-DS25- 015 / 030 / 050

(The D-sub connector cable assembly can be ordered individually or included in a specific manifold model no. Refer to "How to Order Manifold.")

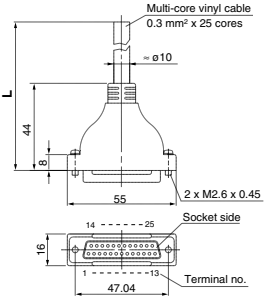

D-sub connector cable assembly

Cable length (L)	Assembly part no.	Note
1.5 m	AXT100-DS25-015	Cable 25 cores x 24AWG
3 m	AXT100-DS25-030	
5 m	AXT100-DS25-050	

∗ For other commercial connectors, use a 25 pins type with female connector conforming to MIL-C-24308.
∗ Cannot be used for transfer wiring.

Example of connector manufacturers
- Fujitsu Limited
- Japan Aviation Electronics Industry, Limited
- J.S.T. Mfg. Co., Ltd.
- HIROSE ELECTRIC CO., LTD.

Electrical characteristics

Item	Property
Conductor resistance Ω/km, 20°C	65 or less
Voltage limit V, 1 minute, AC	1000
Insulation resistance MΩ/km, 20°C	5 or more

Note) The minimum bending radius of the D-sub connector cable is 20 mm.

Wire color by terminal no. of D-sub connector cable assembly

Terminal no.	Lead wire color	Dot marking
1	Black	None
2	Brown	None
3	Red	None
4	Orange	None
5	Yellow	None
6	Pink	None
7	Blue	None
8	Purple	White
9	Gray	Black
10	White	Black
11	White	Red
12	Yellow	Red
13	Orange	Red
14	Yellow	Black
15	Pink	Black
16	Blue	White
17	Purple	None
18	Gray	None
19	Orange	Black
20	Red	White
21	Brown	White
22	Pink	Red
23	Gray	Red
24	Black	White
25	White	None

Note 1) Types with 15 pins are also available. Refer to page 561 for details.
Note 2) Lengths other than the above are also available. Please contact SMC for details.

How to Order Manifold

Note) For CE compliant models, DC-type only. CE [Option]

10 –VV5Q 1 1– 08 C6 F U 1 – □ – □

10	Clean series
21	Copper/Fluorine/Silicone free + Low particle generation

Series ●

1	VQ1000
2	VQ2000

Manifold ●

1	Plug-in unit

Stations ●

02	2 stations
⋮	⋮
24	24 stations

Note) Refer to page 562 for details.

Connector entry direction

U	Top entry
S	Side entry

Cylinder port ●

Symbol	Port size	VQ1000	VQ2000
C3 Note 1)	With ø3.2 One-touch fitting	●	—
C4 Note 1)	With ø4 One-touch fitting	●	●
C6 Note 1)	With ø6 One-touch fitting	●	●
C8 Note 1)	With ø8 One-touch fitting	—	●
M5	M5 thread	●	—
CM Note 2) Note 3)	Mixed sizes and with port plug	●	●
MM Note 4)	Mixed size for different types of piping, option installed	●	●

Note 1) Insert "L" (Top ported) or "B" (Bottom ported) for elbow type.
Example) B6 (Bottom ported elbow with ø6 One-touch fitting)
Note 2) Indicate "LM" for models with elbow fittings and mixed cylinder port sizes.
Note 3) Indicate "Mixed sizes and with port plug" by means of the manifold specification sheet.
Note 4) When selecting the mixed size for different types of piping, dual flow fitting assembly, or double check block (direct mounting), enter "MM" and give instructions on the manifold specification sheet.
Note 5) Inch-size One-touch fittings are available. Refer to "Semi-standard" on page 563 for details.

Cable (Length) ●

0	Without cable
1	With cable (1.5 m)
2	With cable (3 m)
3	With cable (5 m)

CE compliant ●

Nil	—
Q	CE compliant

Note) For CE compliant models, DC-type only.

Option ●

Symbol	Option
Nil	None
2	200/220 VAC models (F/L kit only)
B Note 2)	With back pressure check valve
D	DIN rail mounting
D0	With DIN rail bracket (Without DIN rail)
D□ Note 3)	DIN rail length specified (□: Stations 02 to 24)
K Note 4)	Special wiring specifications (Except double wiring)
N	With name plate
R Note 5)	External pilot

Note 1) When two or more symbols are specified, indicate them alphabetically. Example) -BNR
Note 2) Models with a suffix "-B" have check valves for prevention of back pressure at all manifold stations. When a back pressure check valve is desired, and is to be installed only in certain manifold stations, specify the mounting position by means of the manifold specification sheet.
Note 3) The number of stations that may be displayed is longer than the manifold number of stations.
Note 4) Specify the wiring specifications by means of the manifold specification sheet.
Note 5) Indicate "R" for the valve with external pilot.

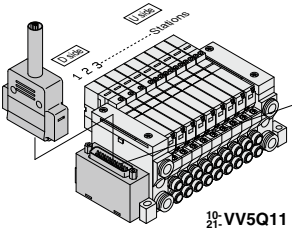

10-/21-VV5Q11

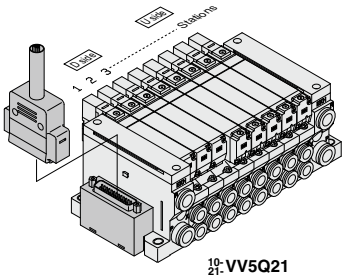

10-/21-VV5Q21

The total number of stations is tabulated starting from station one on the D-side.

Electrical Wiring Specifications

D-sub connector

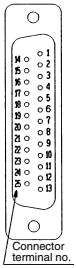

D-sub connector assembly
AXT100-DS25-015 / 030 / 050 Wire color

	Terminal no.	Polarity		Lead wire color	Dot marking
Station 1 SOL.A	1	(–)	(+)	Black	None
Station 1 SOL.B	14	(–)	(+)	Yellow	Black
Station 2 SOL.A	2	(–)	(+)	Brown	None
Station 2 SOL.B	15	(–)	(+)	Pink	Black
Station 3 SOL.A	3	(–)	(+)	Red	None
Station 3 SOL.B	16	(–)	(+)	Blue	White
Station 4 SOL.A	4	(–)	(+)	Orange	None
Station 4 SOL.B	17	(–)	(+)	Purple	None
Station 5 SOL.A	5	(–)	(+)	Yellow	None
Station 5 SOL.B	18	(–)	(+)	Gray	None
Station 6 SOL.A	6	(–)	(+)	Pink	None
Station 6 SOL.B	19	(–)	(+)	Orange	Black
Station 7 SOL.A	7	(–)	(+)	Blue	None
Station 7 SOL.B	20	(–)	(+)	Red	White
Station 8 SOL.A	8	(–)	(+)	Purple	White
Station 8 SOL.B	21	(–)	(+)	Brown	White
Station 9 SOL.A	9	(–)	(+)	Gray	Black
Station 9 SOL.B	22	(–)	(+)	Pink	Red
Station 10 SOL.A	10	(–)	(+)	White	Black
Station 10 SOL.B	23	(–)	(+)	Gray	Red
Station 11 SOL.A	11	(–)	(+)	White	Red
Station 11 SOL.B	24	(–)	(+)	Black	White
Station 12 SOL.A	12	(–)	(+)	Yellow	Red
Station 12 SOL.B	25	(–)	(+)	White	None
COM.	13	(+)	(–) Note)	Orange	Red
		Positive COM spec.	**Negative COM spec.**		

As the standard electrical wiring specifications, double wiring (connected to SOL.A and SOL.B) is adopted for the internal wiring of each station for 12 stations or less, regardless of valve and option types.
Mixed single and double wiring is available as semi-standard. Refer to page 562 for details.

Note) When using the negative common specifications, use valves for negative common. (Refer to page 562.)
Refer to "Semi-standard" on page 562 for details.

How to Order Valve

Note) For CE compliant models, DC-type only. CE [Option]

10–VQ 1 1 0 0 – 5 1–

Series

1	VQ1000
2	VQ2000

10	Clean series
21	Copper/Fluorine/Silicone free + Low particle generation

Actuation type

1	2-position single
2	2-position double
3	3-position closed center
4	3-position exhaust center
5	3-position pressure center

Seal

0	Metal seal
1	Rubber seal

Function

Symbol	Specifications	DC	AC
Nil	Standard	(0.4 W) ○	○ Note 1)
B	High-speed response type	(0.95 W) ○	—
K Note 2)	High-pressure type (1.0 MPa)	(0.95 W) ○	—
N Note 3)	Negative common	○	—
R Note 3)	External pilot	○	○

Note 1) Refer to page 522 for power consumption of AC type.
Note 2) Metal seal only
Note 3) For external pilot and negative common specifications, refer to "Semi-standard" on pages 562 to 563.
Note 4) When two or more symbols are specified, indicate them alphabetically. Combination of [B] and [K] is not possible.

Manual override

Nil	Non-locking push type (Tool required)
B	Locking type (Tool required)
C	Locking type (Manual)
D	Slide locking type (Manual)

Light/surge voltage suppressor

Nil	Yes
E	None

Coil voltage

		CE compliant
1	100 VAC (50/60 Hz)	—
2	200 VAC (50/60 Hz)	—
3	110 VAC (50/60 Hz)	—
4	220 VAC (50/60 Hz)	—
5	24 VDC	●
6	12 VDC	●

CE compliant

Nil	—
Q	CE compliant

Note) For CE compliant models, DC-type only.

How to Order Manifold Assembly

Specify the part numbers for valves and options together beneath the manifold base part number.

<Example>
D-sub connector kit with cable (3 m)
10-VV5Q11-09C6FU2 ··· 1 set–Manifold base part no.
***10-VQ1100-51 ····· 2 sets–Valve part no. (Stations 1 to 2)**
***10-VQ1200-51 ····· 4 sets–Valve part no. (Stations 3 to 6)**
***10-VQ1300-51 ····· 2 sets–Valve part no. (Stations 7 to 8)**
***VVQ1000-10A-1 ···· 1 set–Blanking plate part no. (Station 9)**

Prefix the asterisk to the part no. of the solenoid valve, etc.

Write sequentially from the 1st station on the D-side. When part no. written collectively are complicated, specify them by means of the manifold specification sheet.

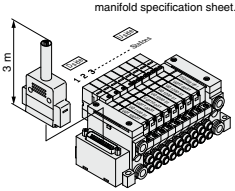

⚠Caution

Use the standard (DC) specification when continuously energizing for long periods of time.

10-21-VV5Q11

< >: AC
The dashed lines indicate the DIN rail mounting [-D] and the side entry connection [-FS].

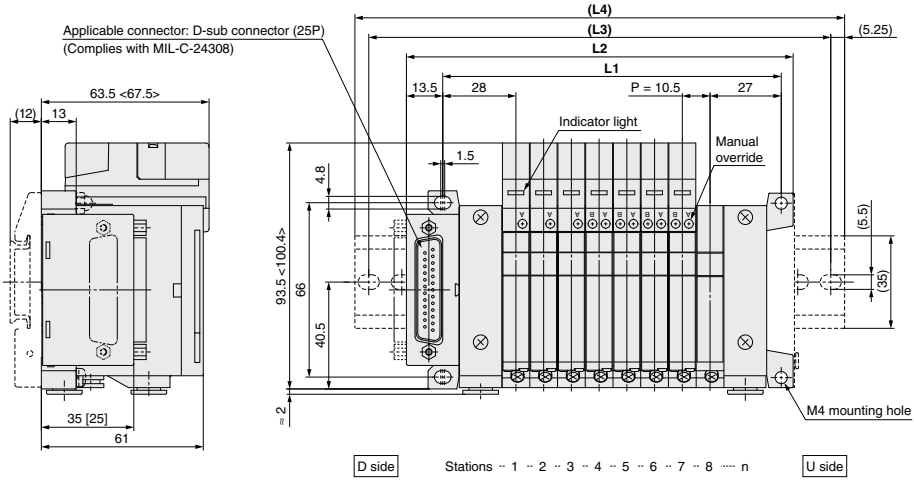

[ ]: 25 pins (top entry)

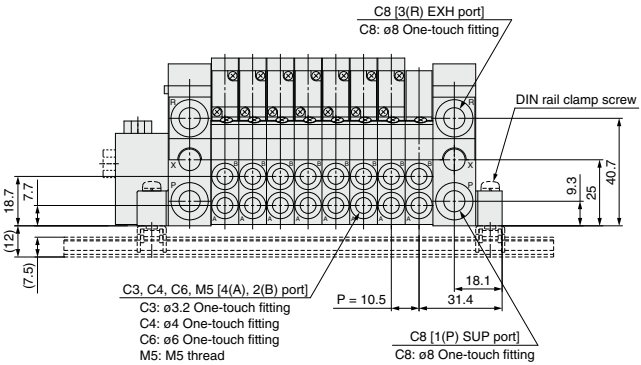

Dimensions

Formula L1 = 10.5n + 44.5, L2 = 10.5n + 62.5 n: Station (Maximum 24 stations)

L \ n	2	3	4	5	6	7	8	9	10	11	12	13	14	15	16	17	18	19	20	21	22	23	24
L1	65.5	76	86.5	97	107.5	118	128.5	139	149.5	160	170.5	181	191.5	202	212.5	223	233.5	244	254.5	265	275.5	286	296.5
L2	83.5	94	104.5	115	125.5	136	146.5	157	167.5	178	188.5	199	209.5	220	230.5	241	251.5	262	272.5	283	293.5	304	314.5
(L3)	112.5	125	125	137.5	150	162.5	175	187.5	187.5	200	212.5	225	237.5	250	250	262.5	275	287.5	300	312.5	325	325	337.5
(L4)	123	135.5	135.5	148	160.5	173	185.5	198	198	210.5	223	235.5	248	260.5	260.5	273	285.5	298	310.5	323	335.5	335.5	348

With ejector unit: Formula L1 = 10.5n + 28.7 + (Number of ejector units x 26.7)
L2 = 10.5n + 46.3 + (Number of ejector units x 26.7)
L4 is L2 plus about 30.

10-21-VV5Q21

< >: AC
The dashed lines indicate the DIN rail mounting [-D] and the side entry connection [-FS].

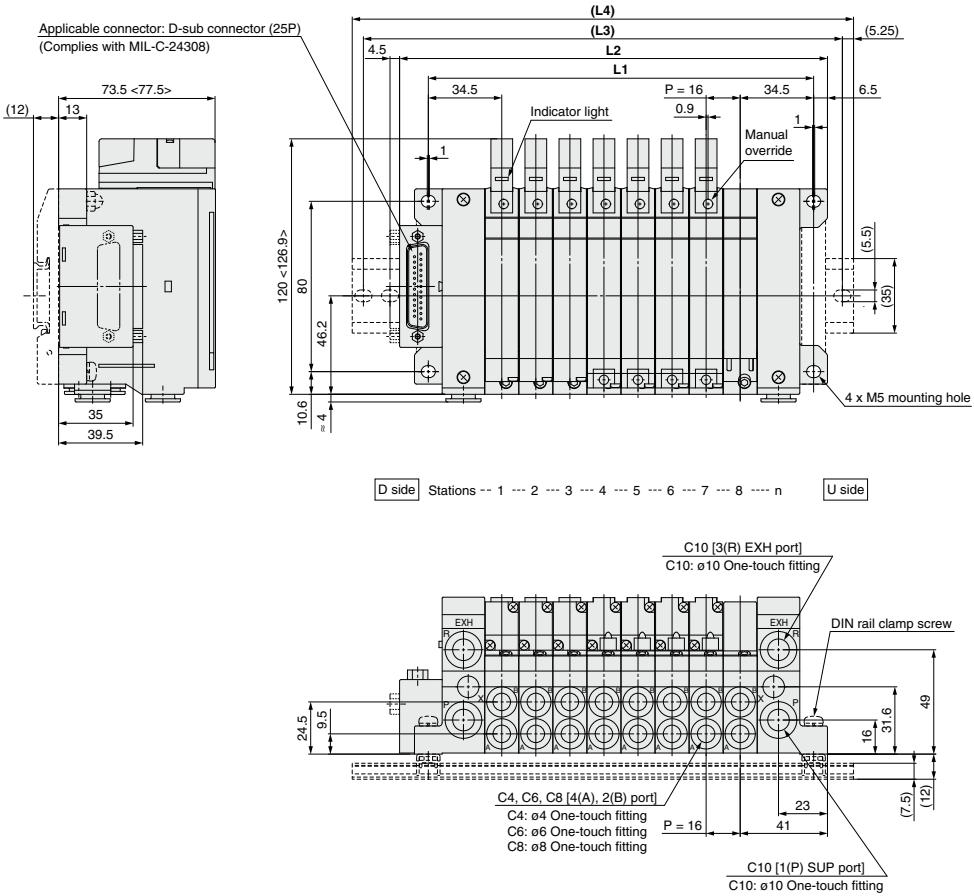

Dimensions

Formula L1 = 16n + 53, L2 = 16n + 73 n: Station (Maximum 24 stations)

L \ n	2	3	4	5	6	7	8	9	10	11	12	13	14	15	16	17	18	19	20	21	22	23	24
L1	85	101	117	133	149	165	181	197	213	229	245	261	277	293	309	325	341	357	373	389	405	421	437
L2	105	121	137	153	169	185	201	217	233	249	265	281	297	313	329	345	361	377	393	409	425	441	457
(L3)	137.5	150	162.5	187.5	200	212.5	225	250	262.5	275	300	312.5	325	337.5	350	375	387.5	400	412.5	437.5	450	462.5	487.5
(L4)	148	160.5	173	198	210.5	223	235.5	260.5	273	285.5	310.5	323	335.5	348	360.5	385.5	398	410.5	423	448	460.5	473	498

P Series 10-/21- VQ1000/2000 kit (Flat ribbon cable)

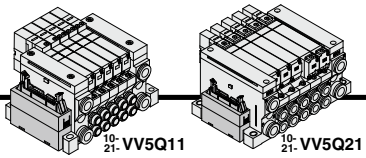

- **MIL flat ribbon cable connector reduces installation labor for electrical connection.**
- **Using the connector for flat ribbon cable (26P) conforming to MIL standard permits the use of commercial connectors and gives a wide interchangeability.**
- **Top or side receptacle position can be selected in accordance with the available mounting space.**
- **Maximum stations are 24.**

Manifold Specifications

Series	Piping specifications			Applicable stations
	Piping direction	Port size		
		1(P), 3(R)	4(A), 2(B)	
10-/21- VQ1000	Side	C8	C3, C4, C6, M5	Max. 24 stations
10-/21- VQ2000	Side	C10	C4, C6, C8	Max. 24 stations

Flat Ribbon Cable (26 Pins)

Cable Assembly

AXT100-FC26-1 to 3

(Flat ribbon cable connector assembly can be ordered individually or included in a specific manifold model no. Refer to "How to Order Manifold.")

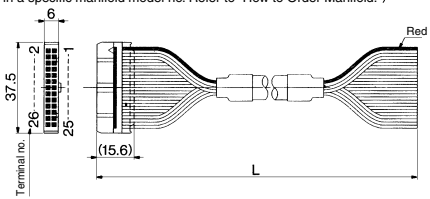

Flat Ribbon Cable Connector Assembly

Cable length (L)	Assembly part no.	Note
1.5 m	AXT100-FC26-1	Cable 26 cores x 28AWG
3 m	AXT100-FC26-2	
5 m	AXT100-FC26-3	

∗ For other commercial connectors, use a 26 pins type with strain relief conforming to MIL-C-83503.
∗ Cannot be used for transfer wiring.

Connector manufacturers' example

- HIROSE ELECTRIC CO., LTD.
- 3M Japan Limited
- Fujitsu Limited
- Japan Aviation Electronics Industry, Limited
- J.S.T. Mfg. Co., Ltd.
- Oki Electric Cable Co., Ltd.

Note 1) Other than the above model, 10P, 16P, 20P are also available. Refer to page 561 for details.
Note 2) Lengths other than the above are also available. Please contact SMC for details.

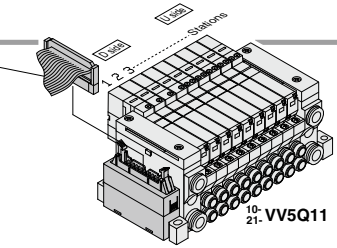

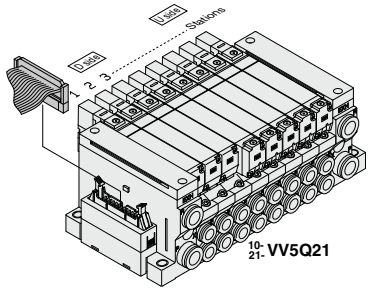

The total number of stations is tabulated starting from one on the D-side.

How to Order Manifold

Note) For CE compliant models, DC-type only. CE [Option]

10 – VV5Q 1 1 – 08 C6 P U 1 – □ – □

10	Clean series
21	Copper/Fluorine/Silicone free + Low particle generation

Series

1	VQ1000
2	VQ2000

Manifold

1	Plug-in unit

Stations

02	2 stations
⋮	⋮
24	24 stations

Note) Refer to page 562 for details.

Cylinder port

Symbol	Port size	VQ1000	VQ2000
C3 Note 1)	With ø3.2 One-touch fitting	●	—
C4 Note 1)	With ø4 One-touch fitting	●	●
C6 Note 1)	With ø6 One-touch fitting	●	●
C8 Note 1)	With ø8 One-touch fitting	—	●
M5	M5 thread	●	—
CM Note 2) Note 3)	Mixed sizes and with port plug	●	●
MM Note 4)	Mixed size for different types of piping, option installed	●	●

Note 1) Insert "L" (Top ported) or "B" (Bottom ported) for elbow type.
Example) B6 (Bottom ported elbow with ø6 One-touch fitting)
Note 2) Indicate "LM" for models with elbow fittings and mixed cylinder port sizes.
Note 3) Indicate "Mixed sizes and with port plug" by means of the manifold specification sheet.
Note 4) When selecting the mixed size for different types of piping, dual flow fitting assembly, or double check block (direct mounting), enter "MM" and give instructions on the manifold specification sheet.
Note 5) Inch-size One-touch fittings are available. Refer to "Semi-standard" on page 563 for details.

Connector entry direction

U	Top entry
S	Side entry

Cable (Length)

0	Without cable
1	With cable (1.5 m)
2	With cable (3 m)
3	With cable (5 m)

CE compliant

Nil	—
Q	CE compliant

Note) For CE compliant models, DC-type only.

Option

Symbol	Option
Nil	None
B Note 2)	With back pressure check valve
D	DIN rail mounting
D0	With DIN rail bracket (Without DIN rail)
D□ Note 3)	DIN rail length specified (□: Stations 02 to 24)
K Note 4)	Special wiring specifications (Except double wiring)
N	With name plate
R Note 5)	External pilot

Note 1) When two or more symbols are specified, indicate them alphabetically. Example) -BNR
Note 2) Models with a suffix "-B" have check valves for prevention of back pressure at all manifold stations. When a back pressure check valve is desired, and is to be installed only in certain manifold stations, specify the mounting position by means of the manifold specification sheet.
Note 3) The number of stations that may be displayed is longer than the manifold number of stations.
Note 4) Specify the wiring specifications by means of the manifold specification sheet.
Note 5) Indicate "R" for the valve with external pilot.

● Electrical Wiring Specifications

Flat ribbon cable connector

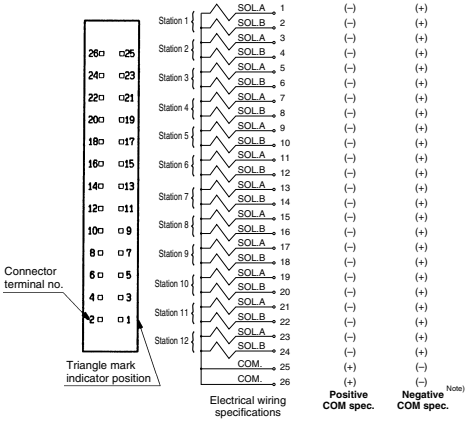

As the standard electrical wiring specifications, double wiring (connected to SOL.A and SOL.B) is adopted for the internal wiring of each station for 12 stations or less, regardless of valve and option types.
Mixed single and double wiring is available as semi-standard. Refer to page 562 for details.

Note) When using the negative common specifications, use valves for negative common. (Refer to page 562.) Refer to "Semi-standard" on page 562 for details.

How to Order Valve

Note) For CE compliant models, DC-type only. CE [Option]

10 –VQ 1 1 0 0 □ – 5 □ □ 1 – □

Series

1	VQ1000
2	VQ2000

10	Clean series
21	Copper/Fluorine/Silicone free + Low particle generation

Actuation type

1	2-position single
2	2-position double
3	3-position closed center
4	3-position exhaust center
5	3-position pressure center

Seal

0	Metal seal
1	Rubber seal

Function

Symbol	Specifications	DC	AC
Nil	Standard	(0.4 W) ○	○ Note 1)
B	High-speed response type	(0.95 W) ○	—
K Note 2)	High-pressure type (1.0 MPa)	(0.95 W) ○	—
N Note 3)	Negative common	○	—
R Note 3)	External pilot	○	○

Coil voltage

		CE compliant
1	100 VAC (50/60 Hz)	—
3	110 VAC (50/60 Hz)	—
5	24 VDC	●
6	12 VDC	●

Note 1) Refer to page 522 for power consumption of AC type.
Note 2) Metal seal only
Note 3) Refer to "Semi-standard" on pages 562 to 563 for external pilot and negative common specifications.
Note 4) When two or more symbols are specified, indicate them alphabetically. Combination of [B] and [K] is not possible.

Light/surge voltage suppressor

Nil	Yes
E	None

Manual override

Nil	Non-locking push type (Tool required)
B	Locking type (Tool required)
C	Locking type (Manual)
D	Slide locking type (Manual)

CE compliant

Nil	—
Q	CE compliant

Note) For CE compliant models, DC-type only.

⚠Caution

Use the standard (DC) specification when continuously energizing for long periods of time.

How to Order Manifold Assembly

Specify the part numbers for valves and options together beneath the manifold base part number.

<Example>

Flat ribbon cable kit with cable (3 m)

10-VV5Q11-09C6PU2 ··· 1 set–Manifold base part no.
∗10-VQ1100-51 ····· 2 sets–Valve part no. (Stations 1 to 2)
∗10-VQ1200-51 ····· 4 sets–Valve part no. (Stations 3 to 6)
∗10-VQ1300-51 ····· 2 sets–Valve part no. (Stations 7 to 8)
∗VVQ1000-10A-1 ····· 1 set–Blanking plate part no. (Station 9)

Prefix the asterisk to the part no. of the solenoid valve, etc.

Write sequentially from the 1st station on the D-side. When part no. written collectively are complicated, specify them by means of the manifold specification sheet.

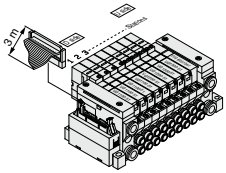

10-/21- VV5Q11

< >: AC
The dashed lines indicate the DIN rail mounting [-D] and the side entry connection [-PS].

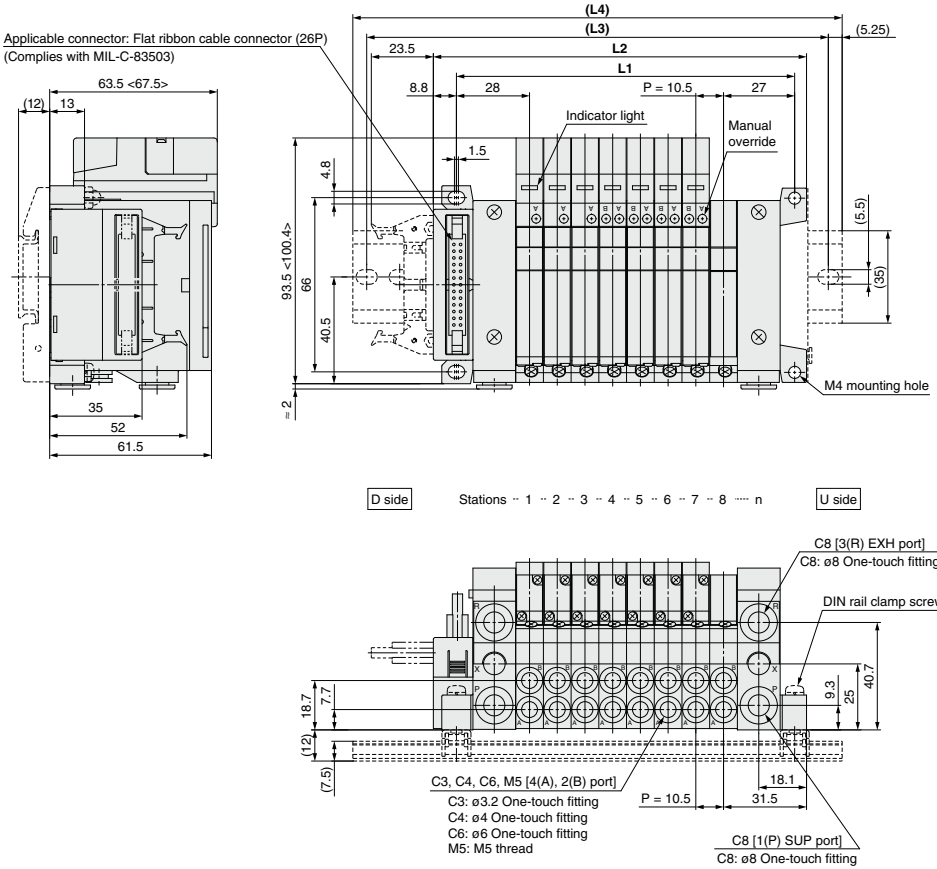

Dimensions

Formula L1 = 10.5n + 44.5, L2 = 10.5n + 57.5 n: Station (Maximum 24 stations)

L \ n	2	3	4	5	6	7	8	9	10	11	12	13	14	15	16	17	18	19	20	21	22	23	24
L1	65.5	76	86.5	97	107.5	118	128.5	139	149.5	160	170.5	181	191.5	202	212.5	223	233.5	244	254.5	265	275.5	286	296.5
L2	78.5	89	99.5	110	120.5	131	141.5	152	162.5	173	183.5	194	204.5	215	225.5	236	246.5	257	267.5	278	288.5	299	309.5
(L3)	112.5	125	125	137.5	150	162.5	175	187.5	187.5	200	212.5	225	225	237.5	250	262.5	275	287.5	287.5	300	312.5	325	337.5
(L4)	123	135.5	135.5	148	160.5	173	185.5	198	198	210.5	223	235.5	235.5	248	260.5	273	285.5	298	298	310.5	323	335.5	348

With ejector unit: Formula L1 = 10.5n + 28.7 + (Number of ejector units x 26.7)
L2 = 10.5n + 41.3 + (Number of ejector units x 26.7)
L4 is L2 plus about 30.

10-21-VV5Q21

< >: AC
The dashed lines indicate the DIN rail mounting [-D] and the side entry connection [-PS].

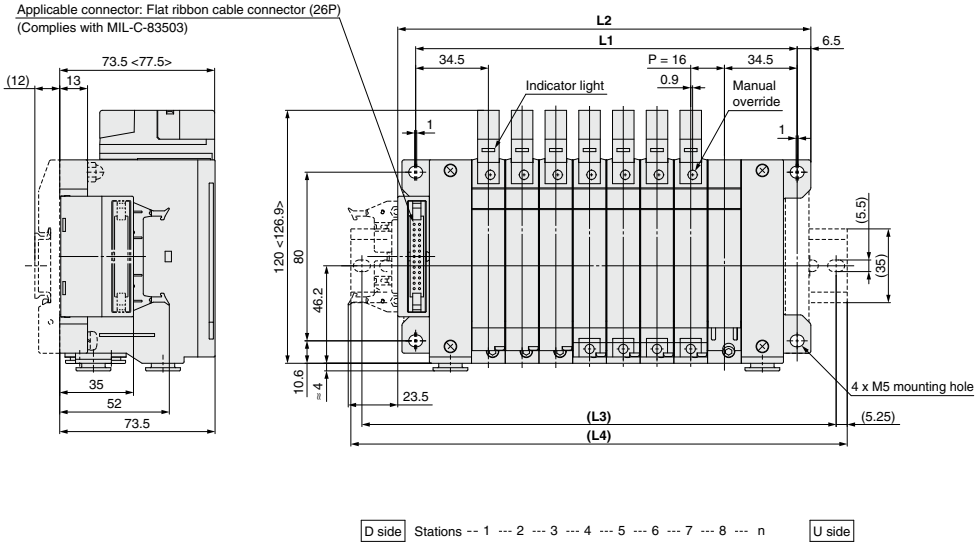

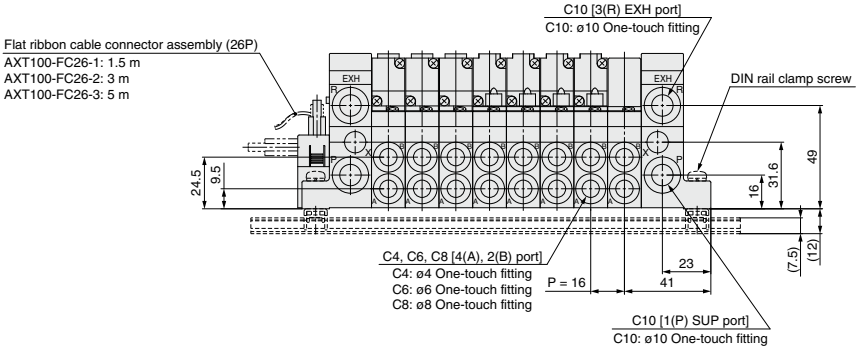

Dimensions

Formula L1 = 16n + 53, L2 = 16n + 68 n: Station (Maximum 24 stations)

L \ n	2	3	4	5	6	7	8	9	10	11	12	13	14	15	16	17	18	19	20	21	22	23	24
L1	85	101	117	133	149	165	181	197	213	229	245	261	277	293	309	325	341	357	373	389	405	421	437
L2	100	116	132	148	164	180	196	212	228	244	260	276	292	308	324	340	356	372	388	404	420	436	452
(L3)	125	150	162.5	175	187.5	212.5	225	237.5	262.5	275	287.5	300	312.5	337.5	350	362.5	387.5	400	412.5	425	450	462.5	475
(L4)	135.5	160.5	173	185.5	198	223	235.5	248	273	285.5	298	310.5	323	348	360.5	373	398	410.5	423	435.5	460.5	473	485.5

10-/21- VV5Q11

The dashed lines and dimensions in parentheses indicate DIN rail mounting [-D].

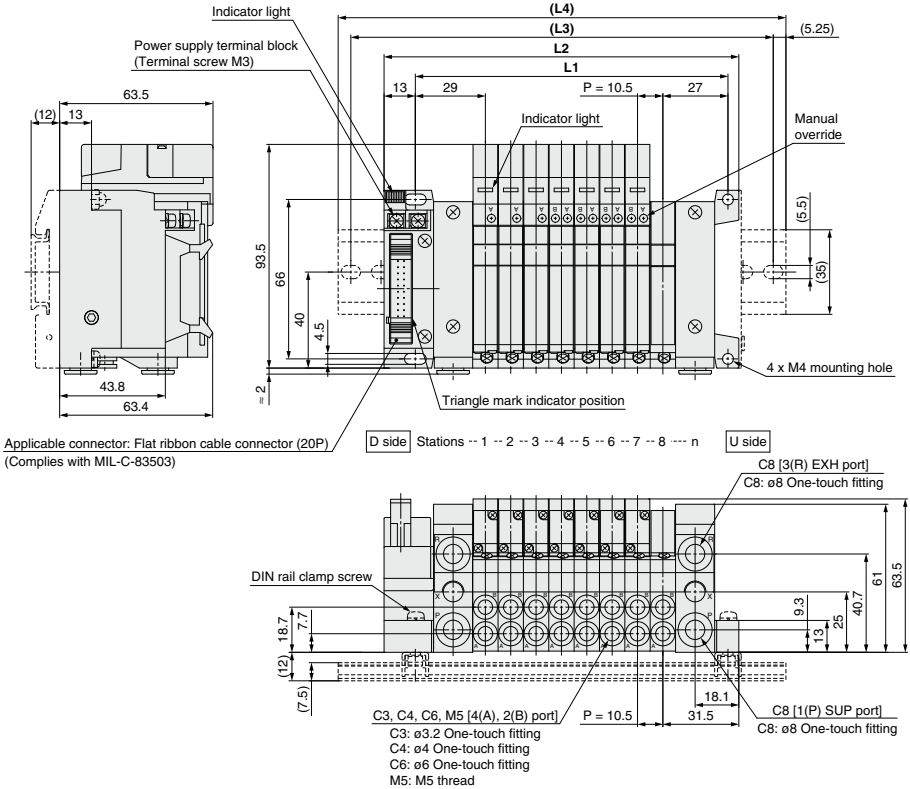

Dimensions

Formula L1 = 10.5n + 45.5, L2 = 10.5n + 63 n: Station (Maximum 16 stations)

L \ n	2	3	4	5	6	7	8	9	10	11	12	13	14	15	16
L1	66.5	77	87.5	98	108.5	119	129.5	140	150.5	161	171.5	182	192.5	203	213.5
L2	84	94.5	105	115.5	126	136.5	147	157.5	168	178.5	189	199.5	210	220.5	231
(L3)	112.5	125	125	137.5	150	162.5	175	187.5	187.5	200	212.5	225	237.5	250	262.5
(L4)	123	135.5	135.5	148	160.5	173	185.5	198	198	210.5	223	235.5	248	260.5	273

With ejector unit: Formula L1 = 10.5n + 29.7 + (Number of ejector units x 26.7)
L2 = 10.5n + 46.8 + (Number of ejector units x 26.7)
L4 is L2 plus about 30.

10-21-VV5Q21

The dashed lines indicate DIN rail mounting [-D] (with DIN rail mounting bracket).

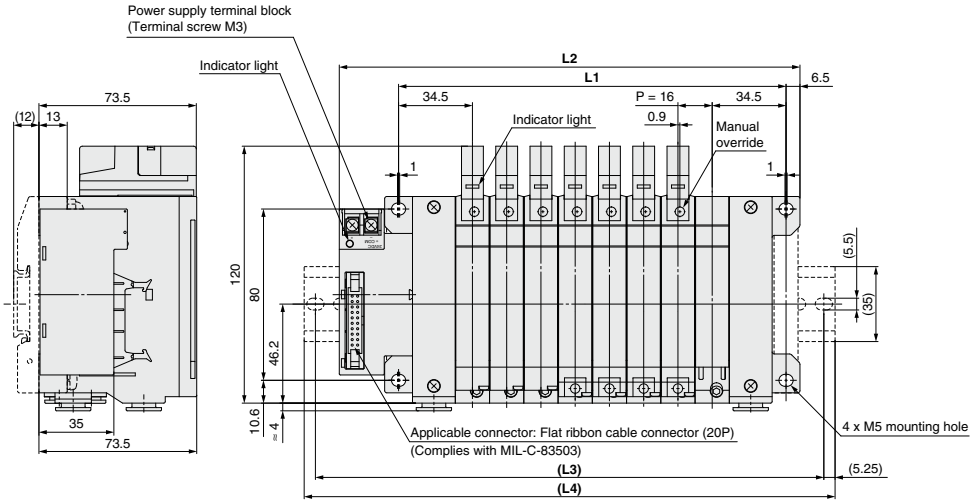

D side Stations --- 1 --- 2 --- 3 --- 4 --- 5 --- 6 --- 7 --- 8 --- n U side

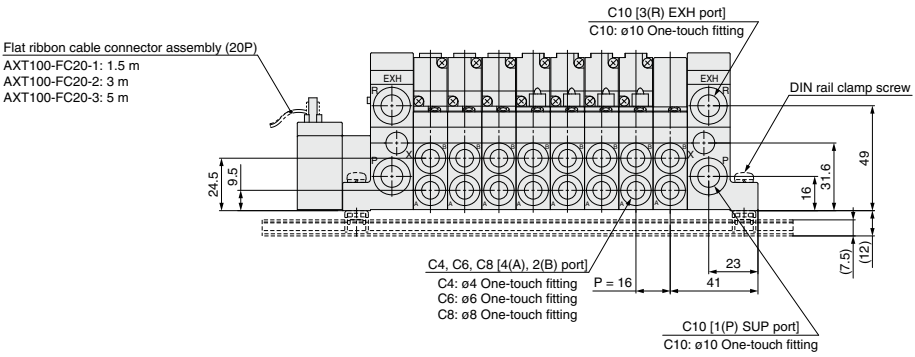

Dimensions

Formula L1 = 16n + 53, L2 = 16n + 87 n: Station (Maximum 16 stations)

L \ n	2	3	4	5	6	7	8	9	10	11	12	13	14	15	16
L1	85	101	117	133	149	165	181	197	213	229	245	261	277	293	309
L2	119	135	151	167	183	199	215	231	247	263	279	295	311	327	343
(L3)	150	162.5	175	187.5	212.5	225	237.5	262.5	275	287.5	300	325	337.5	350	362.5
(L4)	160.5	173	185.5	198	223	235.5	248	273	285.5	298	310.5	335.5	348	360.5	373

T Series 10-/21- VQ1000/2000 kit (Terminal block box)

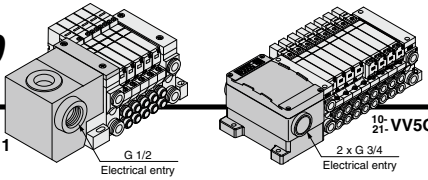

IP65 compliant

- **This kit has a small terminal block inside a junction box. The electrical entry port {10-/21- VQ1000: G 1/2, 10-/21- VQ2000: G 3/4} permits connection of conduit fittings.**
- **Maximum stations: 24 (10-/21- VQ1000), 20 (10-/21- VQ2000)**
- **Enclosure: Dust-tight, Water-jet-proof (IP65) compatible (Series VQ2000)**

Manifold Specifications

Series	Piping specifications			Applicable stations
	Piping direction	Port size		
		1(P), 3(R)	4(A), 2(B)	
10-/21- VQ1000	Side	C8	C3, C4, C6, M5	Max. 24 stations
10-/21- VQ2000	Side	C10	C4, C6, C8	Max. 20 stations

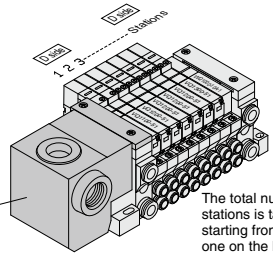

The total number of stations is tabulated starting from station one on the D-side.

Terminal Block Connection (10-/21- VQ1000)

Open the terminal block cover to connect the wires to the terminal block.

Step 1. Removing the terminal block cover

Loosen the screws on the terminal block cover and open it in the direction shown by the arrow. The cover can then be removed from the terminal block.

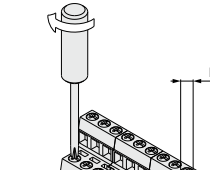

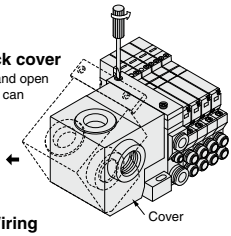

Step 2. Wiring

The diagram on the left shows the terminal block wiring schematic. All stations are provided with double solenoid wiring. Insert each lead wire into the terminal opening and tighten the screw directly above.

How to connect is inserting the lead wire into the terminal window, then tighten the screw on the top. (Tightening torque: 0.25 to 0.35 N·m)

Step 3. Mounting the terminal block cover

Hook groove (a) on shaft (b) and close the cover. Then tighten the screws.

- Drip proof plug assembly (for G 1/2): AXT100-B04A

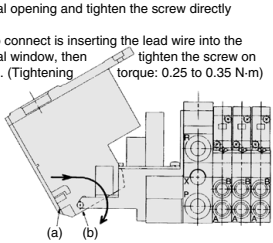

Electrical Wiring Specifications: 10-/21- VQ1000

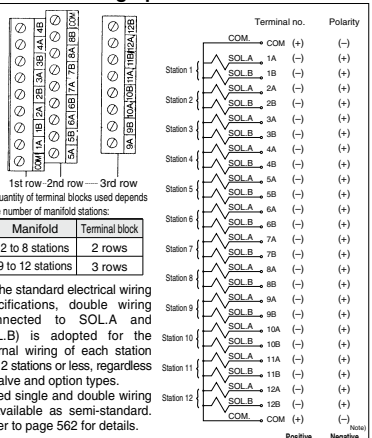

The quantity of terminal blocks used depends on the number of manifold stations:

Manifold	Terminal block
2 to 8 stations	2 rows
9 to 12 stations	3 rows

As the standard electrical wiring specifications, double wiring (connected to SOL.A and SOL.B) is adopted for the internal wiring of each station for 12 stations or less, regardless of valve and option types.
Mixed single and double wiring is available as semi-standard. Refer to page 562 for details.

Note) When using the negative common specifications, use valves for negative common.
Refer to "Semi-standard" on page 562 for details.

Note) For CE compliant models, DC-type only. CE [Option]

How to Order Manifold

10 – VV5Q 1 1 – 08 C6 T 0 – □ – □

Series

1	VQ1000
2	VQ2000

10	Clean series
21	Copper/Fluorine/Silicone free + Low particle generation

Manifold

1	Plug-in unit

Stations

02	2 stations
⋮	⋮
24 Note 1)	24 stations

Note 1) VQ2000: Max. 20 stations
Refer to page 562 for details.

For negative common specifications of series VQ1000, refer to "Semi-standard" on page 562.
For series VQ2000 the standard manifold can be used.

Cylinder port

Symbol	Port size	VQ1000	VQ2000
C3 Note 1)	With ø3.2 One-touch fitting	●	—
C4 Note 1)	With ø4 One-touch fitting	●	●
C6 Note 1)	With ø6 One-touch fitting	●	●
C8 Note 1)	With ø8 One-touch fitting	—	●
M5	M5 thread	●	—
CM Note 2) Note 3)	Mixed sizes and with port plug	●	●
MM Note 4)	Mixed size for different types of piping, option installed	●	●

Note 1) Insert "L" (Top ported) or "B" (Bottom ported) for elbow type. Example) B6 (Bottom ported elbow with ø6 One-touch fitting)
Note 2) Indicate "LM" for models with elbow fittings and mixed cylinder port sizes.
Note 3) Indicate "Mixed sizes and with port plug" by means of the manifold specification sheet.
Note 4) When selecting the mixed size for different types of piping, dual flow fitting assembly, or double check block (direct mounting), enter "MM" and give instructions on the manifold specification sheet.
Note 5) Inch-size One-touch fittings are available. Refer to "Semi-standard" on page 563 for details.

CE compliant

Nil	—
Q	CE compliant

Note) For CE compliant models, DC-type only.

Option

Symbol	Option	VQ1000	VQ2000
Nil	None	●	●
B Note 2)	With back pressure check valve	●	●
D	DIN rail mounting	●	●
D0	With DIN rail bracket (Without DIN rail)	●	●
D□ Note 4)	DIN rail length specified (□: Stations 02 to 24)	●	●
K Note 4)	Special wiring spec. (Except double wiring)	●	●
N	With name plate	●	●
R Note 5)	External pilot	●	●
W	Enclosure: Dust-tight, Water-jet-proof (IP65)	—	●

Note 1) When two or more symbols are specified, indicate them alphabetically. Example) -BNR
Note 2) Models with a suffix "-B" have check valves for prevention of back pressure at all manifold stations. When a back pressure check valve is desired, and is to be installed only in certain manifold stations, specify the mounting position by means of the manifold specification sheet.
Note 3) The number of stations that may be displayed is longer than the manifold number of stations.
Note 4) Specify the wiring specifications by means of the manifold specification sheet.
Note 5) Indicate "R" for the valve with external pilot.

● Terminal Block Wiring (10-/21- VQ2000)

Open the terminal block cover to connect the wires to the terminal block.

Step 1. Removing the terminal block cover
Loosen mounting screws (4 pcs.) on the terminal block cover and remove the cover.

Step 2. Wiring
Loosen screws on the terminal block, connect wiring and complete it by tightening screws. (Tightening torque: 0.5 to 0.7 N·m)
The diagram on the right shows the terminal block wiring. All stations are provided with double wiring regardless of the valves which are mounted.

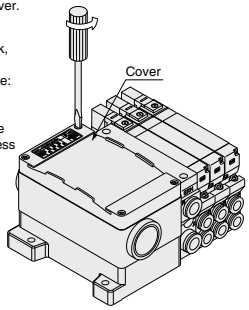

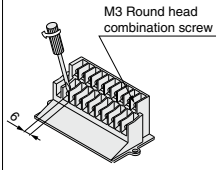

- Applicable crimped terminal: 1.25-3S, 1.25Y-3, 1.25Y-3N, 1.25-3.5
- Name plate: VVQ5000-N-T
- Drip proof plug assembly (for G 3/4): AXT100-B06A

Step 3. Mounting the terminal block cover
Securely tighten the screws after confirming that the gasket is installed correctly.
(Tightening torque: 0.7 to 1.2 N·m)

● Special Wiring Specifications: 10-/21- VQ2000

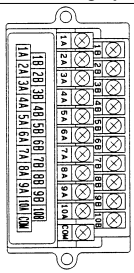

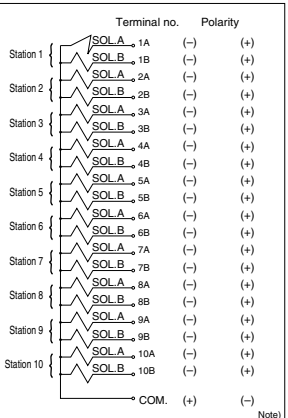

As the standard electrical wiring specifications, double wiring (connected to SOL.A and SOL.B) is adopted for the internal wiring of each station for 10 stations or less, regardless of valve and option types.
Mixed single and double wiring is available as semi-standard.
Refer to page 562 for details.

Note) When using the negative common specifications, use valves for negative common.

Refer to "Semi-standard" on page 562 for details.

How to Order Valve

Note) For CE compliant models, DC-type only. CE [Option]

10–VQ 1 1 0 0 – 5 1 –

Series

1	VQ1000
2	VQ2000

10	Clean series
21	Copper/Fluorine/Silicone free + Low particle generation

Actuation type

1	2-position single
2	2-position double
3	3-position closed center
4	3-position exhaust center
5	3-position pressure center

Seal

0	Metal seal
1	Rubber seal

Function

Symbol	Specifications	DC	AC
Nil	Standard	(0.4 W) ○	○ Note 1)
B	High-speed response type	(0.95 W) ○	—
K Note 2)	High-pressure type (1.0 MPa)	(0.95 W) ○	—
N Note 3)	Negative common	○	—
R Note 3)	External pilot	○	○

CE compliant

Nil	—
Q	CE compliant

Note) For CE compliant models, DC-type only.

Enclosure

Nil	Dust-protected
W Note)	Dust-tight, Water-jet-proof (IP65)

Note) VQ2000 only

Manual override

Nil	Non-locking push type (Tool required)
B	Locking type (Tool required)
C	Locking type (Manual)
D	Slide locking type (Manual)

Light/surge voltage suppressor

Nil	Yes
E	None

Coil voltage

		CE compliant
1	100 VAC (50/60 Hz)	—
3	110 VAC (50/60 Hz)	—
5	24 VDC	●
6	12 VDC	●

Note 1) Refer to page 522 for power consumption of AC type.
Note 2) Metal seal only
Note 3) Refer to "Semi-standard" on pages 562 to 563 for external pilot and negative common specifications.
Note 4) When two or more symbols are specified, indicate them alphabetically. Combination of [B] and [K] is not possible.

⚠Caution

Use the standard (DC) specification when continuously energizing for long periods of time.

How to Order Manifold Assembly

Specify the part numbers for valves and options together beneath the manifold base part number.

<Example>

Terminal block box kit

10-VV5Q11-08C6T0···1 set–Manifold base part no.
***10-VQ1100-51 ····2 sets–Valve part no. (Stations 1 to 2)**
***10-VQ1200-51 ····4 sets–Valve part no. (Stations 3 to 6)**
***10-VQ1300-51 ····1 set–Valve part no. (Station 7)**
***VVQ1000-10A-1 ··1 set–Blanking plate part no. (Station 8)**

Prefix the asterisk to the part no. of the solenoid valve, etc.

Write sequentially from the 1st station on the D-side. When part no. written collectively are complicated, specify them by means of the manifold specification sheet.

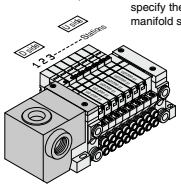

10-/21-VV5Q11

< >: AC
The dashed lines and dimensions in parentheses indicate DIN rail mounting [-D].

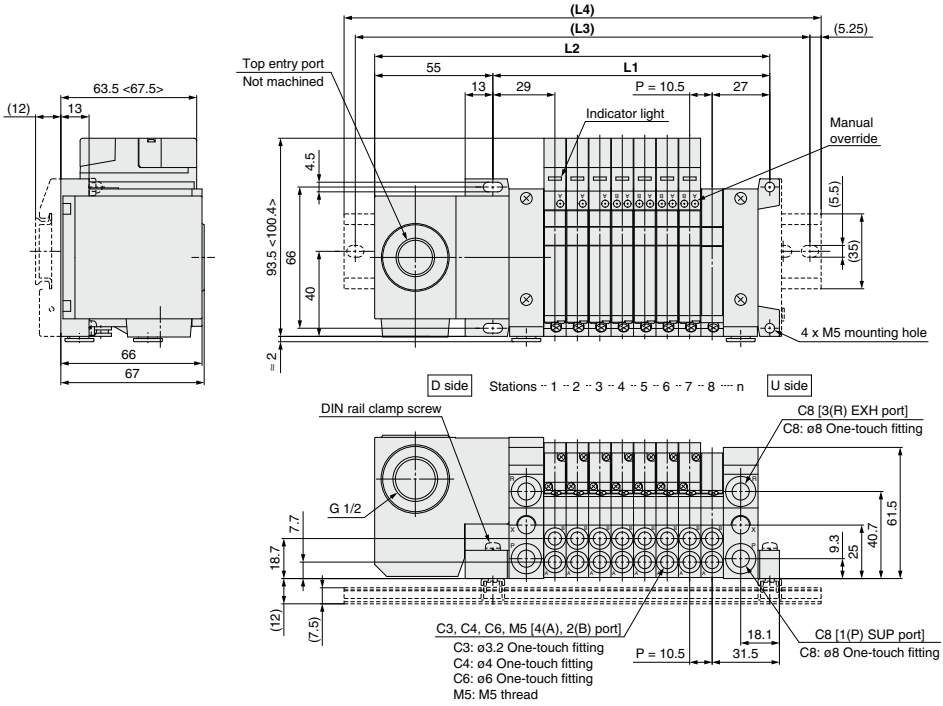

Dimensions

Formula L1 = 10.5n + 45.5, L2 = 10.5n + 105 n: Station (Maximum 24 stations)

L \ n	2	3	4	5	6	7	8	9	10	11	12	13	14	15	16	17	18	19	20	21	22	23	24
L1	66.5	77	87.5	98	108.5	119	129.5	140	150.5	161	171.5	182	192.5	203	213.5	224	234.5	245	255.5	266	276.5	287	297.5
L2	126	136.5	147	157.5	168	178.5	189	199.5	210	220.5	231	241.5	252	262.5	273	283.5	294	304.5	315	325.5	336	346.5	357
(L3)	150	162.5	175	187.5	187.5	200	212.5	225	237.5	250	262.5	262.5	275	287.5	300	312.5	325	325	337.5	350	362.5	375	387.5
(L4)	160.5	173	185.5	198	198	210.5	223	235.5	248	260.5	273	273	285.5	298	310.5	323	335.5	335.5	348	360.5	373	385.5	398

With ejector unit: Formula L1 = 10.5n + 29.7 + (Number of ejector units x 26.7)
L2 = 10.5n + 88.8 + (Number of ejector units x 26.7)
L4 is L2 plus about 30.

10-21-VV5Q21

< >: AC
The dashed lines indicate DIN rail mounting [-D] (with DIN rail mounting bracket).

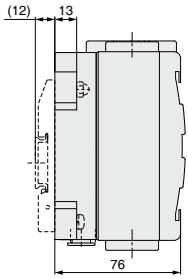

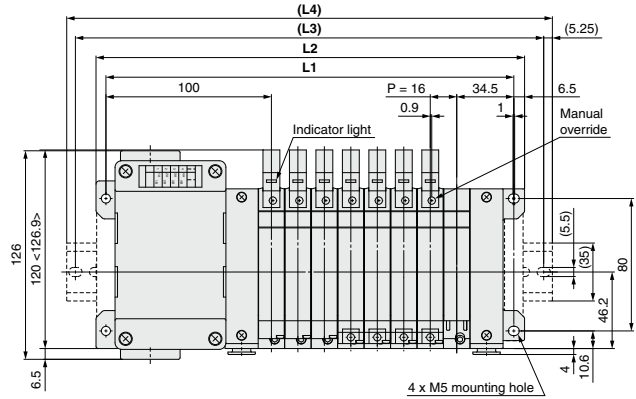

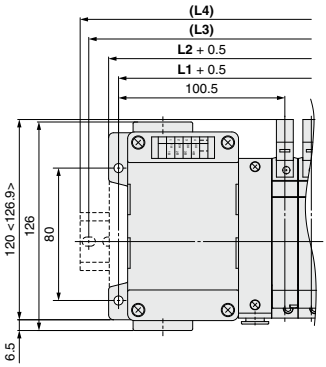

Dust-tight, Water-jet-proof

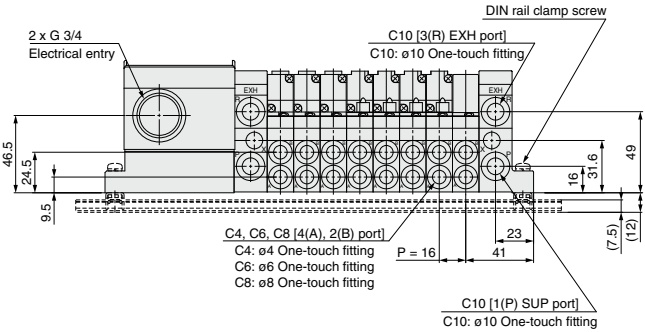

Dimensions

Formula L1 = 16n + 118.5, L2 = 16n + 131 n: Station (Maximum 20 stations)

L \ n	2	3	4	5	6	7	8	9	10	11	12	13	14	15	16	17	18	19	20
L1	150.5	166.5	182.5	198.5	214.5	230.5	246.5	262.5	278.5	294.5	310.5	326.5	342.5	358.5	374.5	390.5	406.5	422.5	438.5
L2	163	179	195	211	227	243	259	275	291	307	323	339	355	371	387	403	419	435	451
(L3)	187.5	200	225	237.5	250	262.5	287.5	300	312.5	337.5	350	362.5	375	400	412.5	425	450	462.5	475
(L4)	198	210.5	235.5	248	260.5	273	298	310.5	323	348	360.5	373	385.5	410.5	423	435.5	460.5	473	485.5

L Series 10-/21- VQ1000/2000 kit (Lead wire)

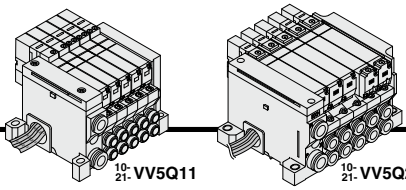

IP65 compliant

- **Direct electrical entry. Models with one or more stations are available.**
- **SUP and EXH ports are provided on one side for further space savings.**
- **Maximum stations are 8.**
- **Enclosure: Dust-tight, Water-jet-proof (IP65) compatible (10-/21-Series VQ2000)**

Wiring Specifications: Positive COM ●

Three lead wires are attached to each station regardless of the type of valve which is mounted.
The red wire is for COM connection.

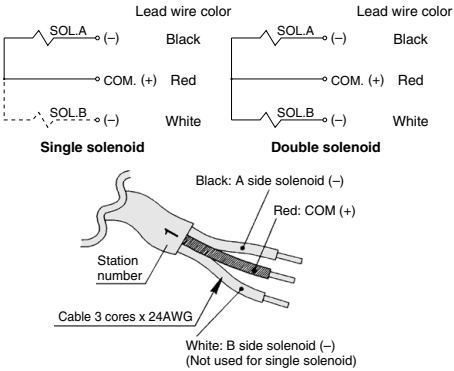

Use any of the below cable lead wire assembly to change the lead wire length:

Lead wire assembly with connector

Lead wire length	Part no.
0.6 m	VVQ1000-84A-6-✻
1.5 m	VVQ1000-84A-15-✻
3 m	VVQ1000-84A-30-✻

✻ Station number 1 to 8

Manifold Specifications

Series	Piping specifications			Applicable stations
	Piping direction	Port size		
		1(P), 3(R)	4(A), 2(B)	
10-/21- VQ1000	Side	C8	C3, C4, C6, M5	Max. 8 stations
10-/21- VQ2000	Side	C10	C6, C8	Max. 8 stations

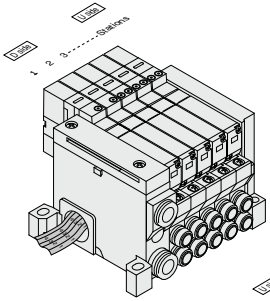

10-/21- VV5Q11

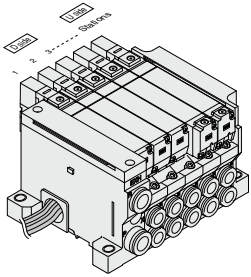

10-/21- VV5Q21

The total number of stations is tabulated on the D-side.

Note) For CE compliant models, DC-type only. CE [Option]

How to Order Manifold

10 –VV5Q 1 1 – 06 C6 L 1 – □ – □

Series

1	VQ1000
2	VQ2000

10	Clean series
21	Copper/Fluorine/Silicone free + Low particle generation

Manifold

1	Plug-in unit

Stations

01	1 station
⋮	⋮
08	8 stations

Note) For negative common specifications, refer to "Semi-standard" on page 562.

Cylinder port

Symbol	Port size	VQ1000	VQ2000
C3 Note 1)	With ø3.2 One-touch fitting	●	—
C4 Note 1)	With ø4 One-touch fitting	●	●
C6 Note 1)	With ø6 One-touch fitting	●	●
C8 Note 1)	With ø8 One-touch fitting	—	●
M5	M5 thread	●	—
CM Note 2) Note 3)	Mixed sizes and with port plug	●	●
MM Note 4)	Mixed size for different types of piping, option installed	●	●

Note 1) Insert "L" (Top ported) or "B" (Bottom ported) for elbow type. Example) B6 (Bottom ported elbow with ø6 One-touch fitting)
Note 2) Indicate "LM" for models with elbow fittings and mixed cylinder port sizes.
Note 3) Indicate "Mixed sizes and with port plug" by means of the manifold specification sheet.
Note 4) When selecting the mixed size for different types of piping, dual flow fitting assembly, or double check block (direct mounting), enter "MM" and give instructions on the manifold specification sheet.
Note 5) Inch-size One-touch fittings are available. Refer to "Semi-standard" on page 563 for details.

Cable (Length)

0	Cable length 0.6 m
1	Cable length 1.5 m
2	Cable length 3 m

CE compliant

Nil	—
Q	CE compliant

Note) For CE compliant models, DC-type only.

Option

Symbol	Option	VQ1000	VQ2000
Nil	None	●	●
2	200/220 VAC models (F/L kit only)	●	●
B Note 2)	With back pressure check valve	●	●
D	DIN rail mounting	●	●
D0	With DIN rail bracket (Without DIN rail)	●	●
D□ Note 3)	DIN rail length specified (□: Stations 02 to 08)	●	●
N	With name plate	●	●
R Note 4)	External pilot	●	●
W	Enclosure: Dust-tight, Water-jet-proof (IP65)	—	●

Note 1) When two or more symbols are specified, indicate them alphabetically. Example) -BNR
Note 2) Models with a suffix "-B" have check valves for prevention of back pressure at all manifold stations. When a back pressure check valve is desired, and is to be installed only in certain manifold stations, specify the mounting position by means of the manifold specification sheet.
Note 3) The number of stations that may be displayed is longer than the manifold number of stations.
Note 4) Indicate "R" for the valve with external pilot.

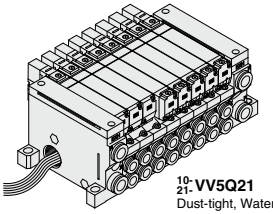

10-/21- VV5Q21
Dust-tight, Water-jet-proof

● **Wiring Specifications: Negative COM (Semi-standard)**

Three lead wires are attached to each station regardless of the type of valve which is mounted.
The black wire is for COM connection.

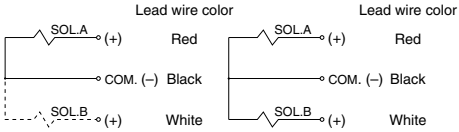

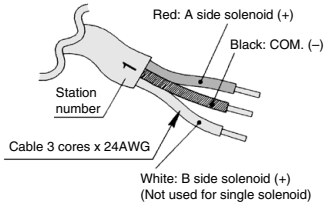

Lead wire assembly with connector

Lead wire length	Part no.
0.6 m	VVQ1000-84AN-6-∗
1.5 m	VVQ1000-84AN-15-∗
3 m	VVQ1000-84AN-30-∗

∗ Station number 1 to 8

Note) When using the negative common specifications, use valves for negative common. For negative common specifications, refer to "Semi-standard" on page 562.

How to Order Valve

Note) For CE compliant models, DC-type only. CE [Option]

10 – VQ 1 1 0 0 □ – 5 □ □ □ 1 – □

Series

1	VQ1000
2	VQ2000

Actuation type

1	2-position single
2	2-position double
3	3-position closed center
4	3-position exhaust center
5	3-position pressure center

Seal

0	Metal seal
1	Rubber seal

10	Clean series
21	Copper/Fluorine/Silicone free + Low particle generation

Function

Symbol	Specifications	DC	AC
Nil	Standard	(0.4 W) ○	○ Note 1)
B	High-speed response type	(0.95 W) ○	—
K Note 2)	High-pressure type (1.0 MPa)	(0.95 W) ○	—
N Note 3)	Negative common	○	—
R Note 3)	External pilot	○	○

Note 1) Refer to page 522 for power consumption of AC type.
Note 2) Metal seal only
Note 3) For external pilot and negative common specifications, refer to "Semi-standard" on pages 562 to 563.
Note 4) When two or more symbols are specified, indicate them alphabetically. Combination of [B] and [K] is not possible.

CE compliant

Nil	—
Q	CE compliant

Note) For CE compliant models, DC-type only.

Enclosure

Nil	Dust-protected
W Note)	Dust-tight, Water-jet-proof (IP65)

Note) VQ2000 only

Manual override

Nil	Non-locking push type (Tool required)
B	Locking type (Tool required)
C	Locking type (Manual)
D	Slide locking type (Manual)

Light/surge voltage suppressor

Nil	Yes
E	None

Coil voltage

		CE compliant
1	100 VAC (50/60 Hz)	—
2	200 VAC (50/60 Hz)	—
3	110 VAC (50/60 Hz)	—
4	220 VAC (50/60 Hz)	—
5	24 VDC	●
6	12 VDC	●

How to Order Manifold Assembly

Specify the part numbers for valves and options together beneath the manifold base part number.

<Example>

Lead wire kit with cable (3 m)

10-VV5Q11-06C6L2 ··· 1 set–Manifold base part no.
∗10-VQ1100-51 ····· 2 sets–Valve part no. (Stations 1 to 2)
∗10-VQ1200-51 ····· 2 sets–Valve part no. (Stations 3 to 4)
∗10-VQ1300-51 ····· 1 set–Valve part no. (Station 5)
∗VVQ1000-10A-1 ·· 1 set–Blanking plate part no. (Station 6)

Prefix the asterisk to the part no. of the solenoid valve, etc.

Write sequentially from the 1st station on the D-side. When part no. written collectively are complicated, specify them by means of the manifold specification sheet.

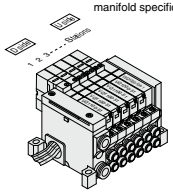

⚠Caution

Use the standard (DC) specification when continuously energizing for long periods of time.

10-21-VV5Q11

< >: AC
The dashed lines indicate DIN rail mounting [-D] (with DIN rail mounting bracket).

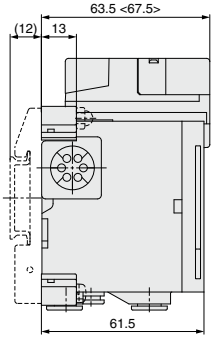

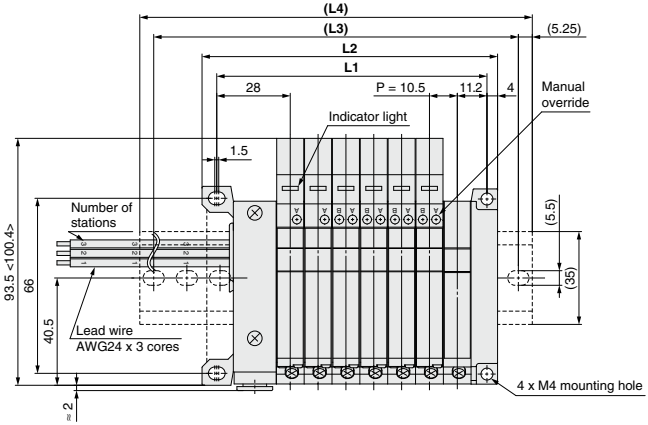

D side Stations -- 1 -- 2 -- 3 -- 4 -- 5 -- 6 -- 7 -- n U side

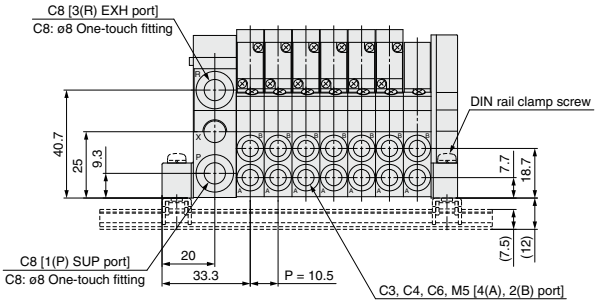

Formula L1 = 10.5n + 28.5, L2 = 10.5n + 38
n: Station (Maximum 8 stations)

Dimensions

L \ n	1	2	3	4	5	6	7	8
L1	39	49.5	60	70.5	81	91.5	102	112.5
L2	48.5	59	69.5	80	90.5	101	111.5	122
(L3)	75	87.5	87.5	100	112.5	125	137.5	150
(L4)	85.5	98	98	110.5	123	135.5	148	160.5

With ejector unit: Formula L1 = 10.5n + 28.5 + (Number of ejector units x 26.7)
L2 = 10.5n + 38 + (Number of ejector units x 26.7)
L4 is L2 plus about 30.

10-21-VV5Q21

< >: AC
The dashed lines indicate DIN rail mounting [-D] (with DIN rail mounting bracket).

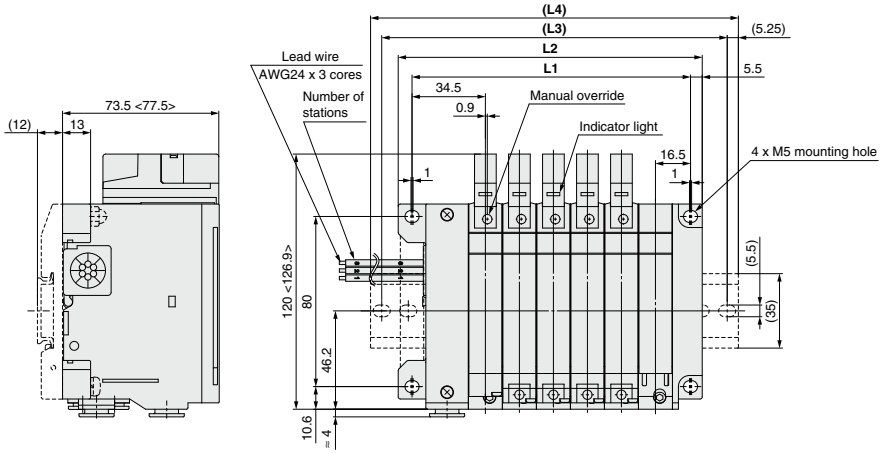

Dust-tight, Water-jet-proof

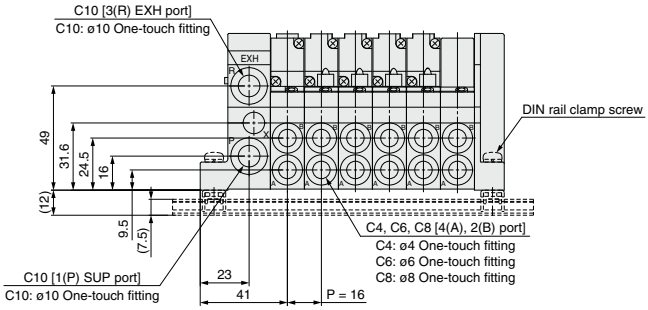

Dimensions

Formula L1 = 16n + 35, L2 = 16n + 47
n: Station (Maximum 8 stations)

L \ n	1	2	3	4	5	6	7	8
L1	51	67	83	99	115	131	147	163
L2	63	79	95	111	127	143	159	175
(L3)	87.5	100	125	137.5	150	162.5	184.5	200
(L4)	98	110.5	135.5	148	160.5	173	198	210.5

S Series 10-/21- VQ1000/2000

kit (Serial transmission) Base mounted plug-in manifold: For EX510 Gateway-type serial transmission system

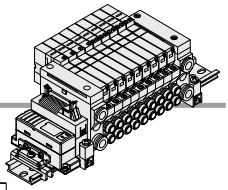

[Option]

How to Order Manifold

10 – VV5Q 1 1 – SB □ 08 □ – D □ – □

10

10	Clean series
21	Copper/Fluorine/Silicone free + Low particle generation

Manifold series

1	VQ1000
2	VQ2000

SI unit specifications

Nil	NPN output (+COM.)
N	PNP output (–COM.)

SI unit part no.

Symbol	SI unit specifications	SI unit part no.
Nil	NPN output (+COM.)	EX510-S002A
N	PNP output (–COM.)	EX510-S102A

Valve stations

Symbol	Stations
01	1 station
⋮	⋮
08	8 stations

Note) Max. 16 stations. (Special wiring specifications)

Cylinder port

Symbol		Port size	VQ1000	VQ2000
Metric size	C3	With ø3.2 One-touch fitting	●	—
	C4	With ø4 One-touch fitting	●	●
	C6	With ø6 One-touch fitting	●	●
	C8	With ø8 One-touch fitting	—	●
	M5	M5 thread	●	—
	CM Note 1)	With mixed sizes and with port plug	●	●
	L3	Top ported elbow with ø3.2 One-touch fitting	●	—
	L4	Top ported elbow with ø4 One-touch fitting	●	●
	L6	Top ported elbow with ø6 One-touch fitting	●	●
	L8	Top ported elbow with ø8 One-touch fitting	—	●
	L5	Top ported elbow M5 thread	●	—
	B3	Bottom ported elbow with ø3.2 One-touch fitting	●	—
	B4	Bottom ported elbow with ø4 One-touch fitting	●	●
	B6	Bottom ported elbow with ø6 One-touch fitting	●	●
	B8	Bottom ported elbow with ø8 One-touch fitting	—	●
	B5	Bottom ported elbow M5 thread	●	—
	LM Note 1)	Elbow port, mixed sizes	●	●
Inch size	N1	ø1/8" with One-touch fitting	●	—
	N3	ø5/32" with One-touch fitting	●	●
	N7	ø1/4" with One-touch fitting	●	●
	N9	ø5/16" with One-touch fitting	—	●
	M5T	UNF10-32 thread	●	—
	NM Note 1)	With mixed sizes and with port plug	●	●
	LN1	Top ported elbow with ø1/8" One-touch fitting	●	—
	LN3	Top ported elbow with ø5/32" One-touch fitting	●	●
	LN7	Top ported elbow with ø1/4" One-touch fitting	●	●
	LN9	Top ported elbow with ø5/16" One-touch fitting	—	●
	L5T	Top ported elbow UNF10-32 thread	●	—
	BN1	Bottom ported elbow with ø1/8" One-touch fitting	●	—
	BN3	Bottom ported elbow with ø5/32" One-touch fitting	●	●
	BN7	Bottom ported elbow with ø1/4" One-touch fitting	●	●
	BN9	Bottom ported elbow with ø5/16" One-touch fitting	—	●
	B5T	Bottom ported elbow UNF10-32 thread	●	—
	LNM Note 1)	Elbow port, mixed sizes	●	●
MM Note 2)		Mixed size for different types of piping, option installed	●	●

Note 1) Indicate "Mixed sizes and with port plug" in the manifold specification sheet.
Note 2) When selecting the mixed size for different types of piping, dual flow fitting assembly, or double check block (direct mounting), enter "MM" and give instructions on the manifold specification sheet.

Refer to the **WEB catalog** for details on the EX510 gateway-type serial transmission system.

CE compliant

Nil	—
Q	CE compliant

Option

Nil	None
B Note 2)	With back pressure check valve
D□ Note 5)	DIN rail length specified (□: Stations 02 to 16)
K Note 3)	Special wiring spec. (Except double wiring)
N	With name plate
R Note 4)	with external pilot

Note 1) When two or more symbols are specified, indicate them alphabetically. Example) -BNR
Note 2) Models with a suffix "-B" have check valves for prevention of back pressure at all manifold stations. When a back pressure check valve is desired, and is to be installed only in certain manifold stations, specify the mounting position by means of the manifold specification sheet.
Note 3) Specify the wiring specifications by means of the manifold specification sheet.
Note 4) Indicate "R" for the valve with external pilot.
Note 5) The number of stations that may be displayed is longer than the manifold number of stations.

DIN rail mounting

How to Order Manifold Assembly

Example

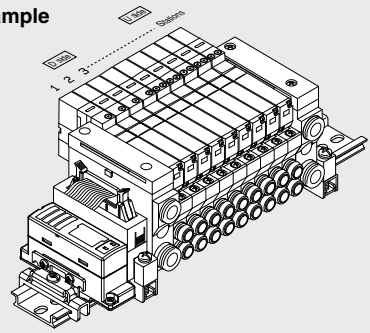

10-VV5Q11-SB08C6-D ··· 1 set (SB kit, 8-station manifold part no.)
∗10-VQ1100-51 ····· 4 sets (Single type part no.)
∗10-VQ1200-51 ····· 3 sets (Double type part no.)
∗10-VQ1300-51 ····· 1 set (3 position type part no.)
→ The asterisk denotes the symbol for assembly. Prefix it to the part no. of the solenoid valve, etc.
→ Enter in order starting from the first station on the D-side.

Add the valve and option part numbers under the manifold base part number. For complex arrangements, specify them by means of the manifold specification sheet.

CE [Option]

How to Order Valve

10 – VQ 1 1 0 0 ☐ – 5 ☐ 1 – ☐

10	Clean series
21	Copper/Fluorine/Silicone free + Low particle generation

Series

1	VQ1000
2	VQ2000

Actuation type

1		2-position single 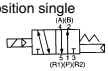
2	Metal	2-position double 
	Rubber	2-position double 
3		3-position closed center 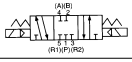
4		3-position exhaust center 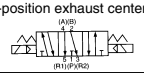
5		3-position pressure center 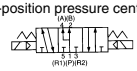

Manual override

Nil: Non-locking push type (Tool required)

B: Locking type (Tool required)

C: Locking type (Manual)

D: Slide locking type (Manual)

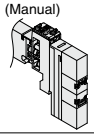

CE compliant

Nil	—
Q	CE compliant

Rated voltage

5	24 VDC

Function

Symbol	Specifications
Nil	Standard (0.4 W)
B	High-speed response type (0.95 W)
K Note 1)	High-pressure type (1.0 MPa) [0.95 W]
N Note 2)	Negative common
R Note 2)	External pilot

Note 1) Metal seal only
Note 2) For external pilot and negative common specifications, refer to "Semi-standard" on pages 562 to 563.
Note 3) When two or more symbols are specified, indicate them alphabetically. Combination of [B] and [K] is not possible.

Seal

0	Metal seal
1	Rubber seal

10-/21-VV5Q11

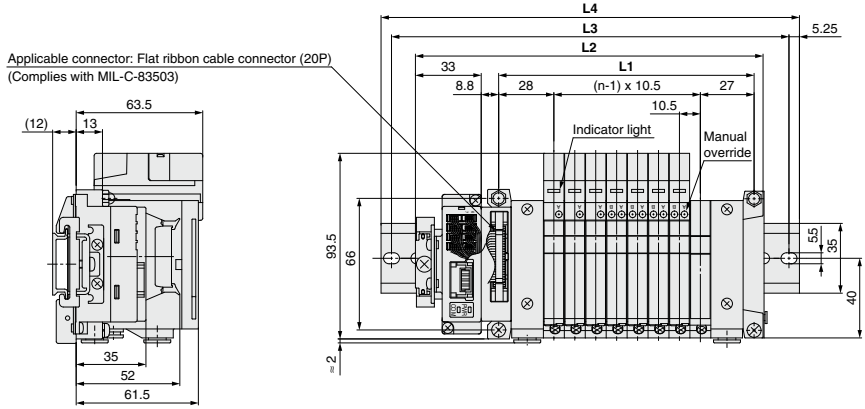

D side Stations 1 2 3 4 5 6 7 8 n U side

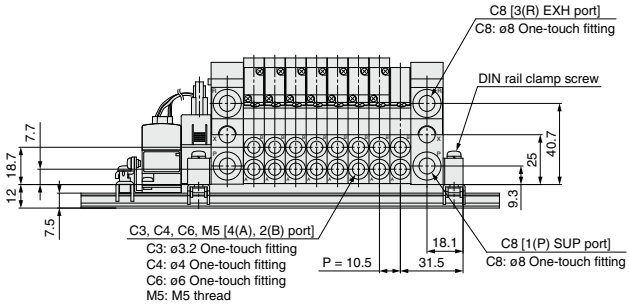

Dimensions

Formula L1 = 10.5n + 44.5, L2 = 10.5n + 91 n: Station (Maximum 16 stations)

L \ n	1	2	3	4	5	6	7	8	9	10	11	12	13	14	15	16
L1	55	65.5	76	86.5	97	107.5	118	128.5	139	149.5	160	170.5	181	191.5	202	212.5
L2	101.5	112	122.5	133	143.5	154	164.5	175	185.5	196	206.5	217	227.5	238	248.5	259
L3	125	137.5	150	162.5	175	175	187.5	200	212.5	225	237.5	237.5	250	262.5	275	287.5
L4	135.5	148	160.5	173	185.5	185.5	198	210.5	223	235.5	248	248	260.5	273	285.5	298

10-21-VV5Q21

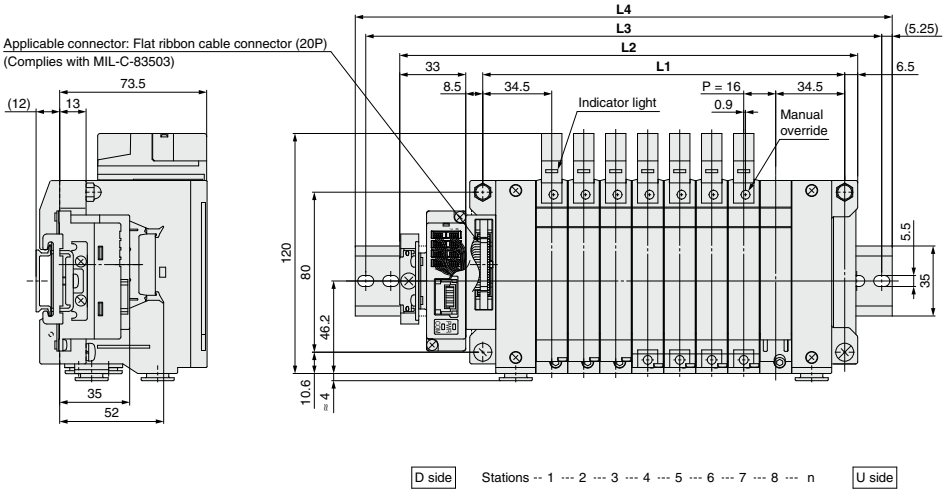

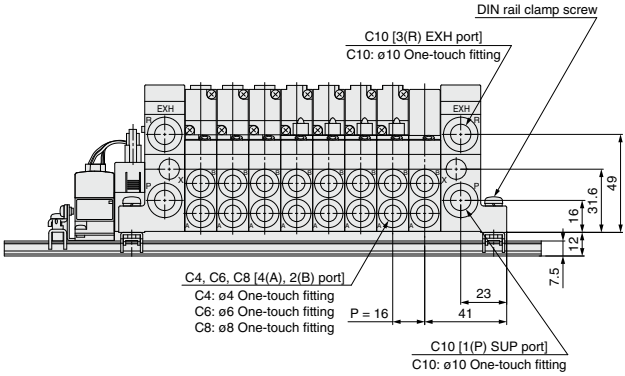

Dimensions

Formula L1 = 16n + 53, L2 = 16n + 101 n: Station (Maximum 16 stations)

L \ n	1	2	3	4	5	6	7	8	9	10	11	12	13	14	15	16
L1	69	85	101	117	133	149	165	181	197	213	229	245	261	277	293	309
L2	117	133	149	165	181	197	213	229	245	261	277	293	309	325	341	357
L3	137.5	162.5	175	187.5	212.5	225	237.5	250	275	287.5	300	312.5	337.5	350	362.5	387.5
L4	148	173	185.5	198	223	235.5	248	260.5	285.5	298	310.5	323	348	360.5	373	398

S Series 10-21- VQ1000/2000

kit (Serial transmission): For EX120/123/124 Integrated-type (Output) serial transmission system

IP65 compliant

- **The serial transmission system reduces wiring work, while minimizing wiring and saving space.**
- **Enclosure: Dust-tight, Water-jet-proof (IP65) compatible (Series VQ2000)**

Manifold Specifications

Series	Piping specifications			Applicable stations
	Piping direction	Port size		
		1(P), 3(R)	4(A), 2(B)	
10-21- VQ1000	Side	C8	C3, C4, C6, M5	Max. 16 stations
10-21- VQ2000	Side	C10	C4, C6, C8	Max. 16 stations

Note) Refer to "SI Unit Part No." when ordering the CE-compliant SI unit. CE [Option]

How to Order Manifold

10 – VV5Q 1 1 – 08 C6 S V – □ – XP – □

10

10	Clean series
21	Copper/Fluorine/Silicone free + Low particle generation

Series

1	VQ1000
2	VQ2000

Manifold

1	Plug-in unit

Stations

02	2 stations
⋮	⋮
16 Note)	16 stations

Note 1) Refer to page 562 for details.
Note 2) Max. 16 stations. (Specify a model with 9 to 16 stations by means of the manifold specification sheet.)

SI unit specifications

Symbol	Protocol	Stations
0	Without SI unit	Max.16 stations
H	NKE Corp.: Fieldbus H System	
Q	DeviceNet™	
R1	OMRON Corp.: CompoBus/S (16 outputs)	
R2	OMRON Corp.: CompoBus/S (8 outputs)	Max. 8 stations
V	CC-Link	Max.16 stations
ZB	CompoNet™ (Positive common)	
ZBN	CompoNet™ (Negative common)	

Enclosure

Nil	—
XP Note)	Dust-protected

Note) Suffix "-XP" for the dust-protected type SI units (Except SI unit specification "Q")

CE compliant

Nil	—
Q	CE compliant

Note) Refer to "SI Unit Part No." when ordering the CE-compliant SI unit.

Option

Symbol	Option	VQ1000	VQ2000
Nil	None	●	●
B Note 2)	With back pressure check valve	●	●
D	DIN rail mounting	●	●
D□ Note 3)	DIN rail mounting (□: Stations 02 to 16)	●	●
K Note 4)	Special wiring specifications (Except double wiring)	●	●
N	With name plate	●	●
R Note 5)	With external pilot	●	
W	Enclosure: Dust-tight, Water-jet-proof (IP65)	—	●

Note 1) When two or more symbols are specified, indicate them alphabetically.
Example) -BNR.
Note 2) Models with a suffix "-B" have check valves for prevention of back pressure at all manifold stations. When a back pressure check valve is desired, and is to be installed only in certain manifold stations, specify the mounting position by means of the manifold specification sheet.
Note 3) The number of stations that may be displayed is longer than the manifold number of stations.
Note 4) Specify the wiring specifications by means of the manifold specification sheet.
Note 5) Indicate "R" for the valve with external pilot.

Cylinder port

Symbol	Port size	VQ1000	VQ2000
C3 Note 1)	With ø3.2 One-touch fitting	●	—
C4 Note 1)	With ø4 One-touch fitting	●	●
C6 Note 1)	With ø6 One-touch fitting	●	●
C8 Note 1)	With ø8 One-touch fitting	—	●
M5	M5 thread	●	—
CM Note 2) Note 3)	Mixed sizes and with port plug	●	●
MM Note 4)	Mixed size for different types of piping, option installed	●	●

Note 1) Insert "L" (Top ported) or "B" (Bottom ported) for elbow type.
Example) B6 (Bottom ported elbow with ø6 One-touch fitting)
Note 2) Indicate as "LM" for models with elbow fittings and mixed cylinder port sizes.
Note 3) Indicate "Mixed sizes and with port plug" by means of the manifold specification sheet.
Note 4) When selecting the mixed size for different types of piping, dual flow fitting assembly, or double check block (direct mounting), enter "MM" and give instructions on the manifold specification sheet.
Note 5) Inch-size One-touch fittings are available. Refer to "Semi-standard" on page 563 for details.

SI Unit Part No. (Without option W [Dust-protected (-XP) is included.])

Symbol	Protocol	SI unit part no.	CE compliant
H	NKE Corp.: Fieldbus H System	Standard: EX120-SUH1 Dust-protected: EX120-SUH1-XP	—
Q	DeviceNet™	Standard: EX120-SDN1 Dust-protected: No part no.	●
R1	OMRON Corp.: CompoBus/S (16 outputs)	Standard: EX120-SCS1 Dust-protected: EX120-SCS1-XP	●
R2	OMRON Corp.: CompoBus/S (8 outputs)	Standard: EX120-SCS2 Dust-protected: EX120-SCS2-XP	●
V	CC-Link	Standard: EX120-SMJ1 Dust-protected: EX120-SMJ1-XP	●
ZB	CompoNet™ (Positive common)	Standard: EX120-SCM1 Dust-protected: No part no.	●
ZBN	CompoNet™ (Negative common)	Standard: EX120-SCM3 Dust-protected: No part no.	●

SI Unit Part No. (With option W)

Symbol	Protocol	SI unit part no.	CE compliant
H	NKE Corp.: Fieldbus H System	EX123D-SUH1	—
Q	DeviceNet™	EX124D-SDN1	●
R1	OMRON Corp.: CompoBus/S (16 outputs)	EX124D-SCS1	●
R2	OMRON Corp.: CompoBus/S (8 outputs)	EX124D-SCS2	●
V	CC-Link	EX124D-SMJ1	●

Refer to the **WEB catalog** for details on the EX120/123/124 integrated-type (Output) serial transmission system.
∗ Refer to the **WEB catalog** for details on CompoNet™.

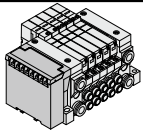

10-/21- VV5Q11

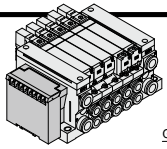

10-/21- VV5Q21

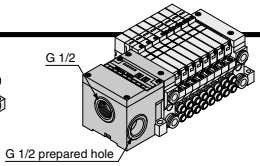

10-/21- VV5Q11
Dust-protected (-XP)

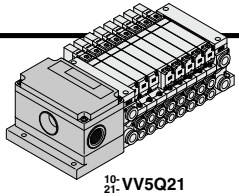

10-/21- VV5Q21
Dust-tight, Water-jet-proof (-W)

How to Order Valve

[Option]

10 – VQ 1 1 0 0 ☐ – 5 ☐ ☐ 1 – ☐

Series

1	VQ1000
2	VQ2000

10	Clean series
21	Copper/Fluorine/Silicone free + Low particle generation

Actuation type

1	2-position single
2	2-position double
3	3-position closed center
4	3-position exhaust center
5	3-position pressure center

Seal

0	Metal seal
1	Rubber seal

Function

Symbol	Specifications	DC
Nil	Standard	(0.4 W) ○
B	High-speed response type	(0.95 W) ○
K Note 1)	High-pressure type (1.0 MPa)	(0.95 W) ○
N Note 2)	Negative common	○
R Note 2)	External pilot	○

Note 1) Metal seal only
Note 2) For external pilot and negative common specifications, refer to "Semi-standard" on pages 562 to 563.
Note 3) When two or more symbols are specified, indicate them alphabetically. Combination of [B] and [K] is not possible.

Coil voltage

5	24 VDC With indicator light/ surge voltage suppressor

Manual override

Nil	Non-locking push type (Tool required)
B	Locking type (Tool required)
C	Locking type (Manual)
D	Slide locking type (Manual)

Enclosure

Nil	Dust-protected
W Note)	Dust-tight, Water-jet-proof (IP65)

Note) 10-/21- VQ2000 only

CE compliant

Nil	—
Q	CE compliant

How to Order Manifold Assembly

Specify the part numbers for valves and options together beneath the manifold base part number.

<Example>

10-VV5Q11-08C6SV ··· 1 set–Manifold base part no.
∗10-VQ1100-51 ····· 2 sets–Valve part no. (Stations 1 to 2)
∗10-VQ1200-51 ····· 4 sets–Valve part no. (Stations 3 to 6)
∗10-VQ1300-51 ····· 1 set–Valve part no. (Station 7)
∗VVQ1000-10A-1 ··· 1 set–Blanking plate part no. (Station 8)

Prefix the asterisk to the part no. of the solenoid valve, etc.

Write sequentially from the 1st station on the D-side. When part no. written collectively are complicated, specify them by means of the manifold specification sheet.

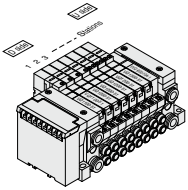

10-/21- VV5Q11

The dashed lines indicate DIN rail mounting [-D] (with DIN rail mounting bracket).

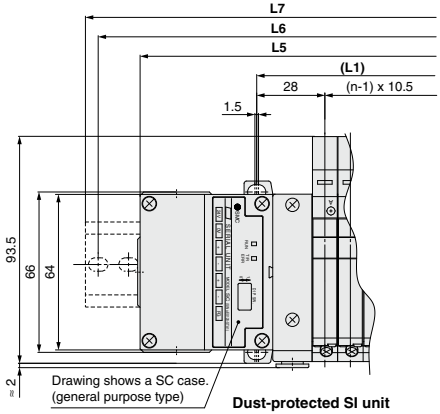

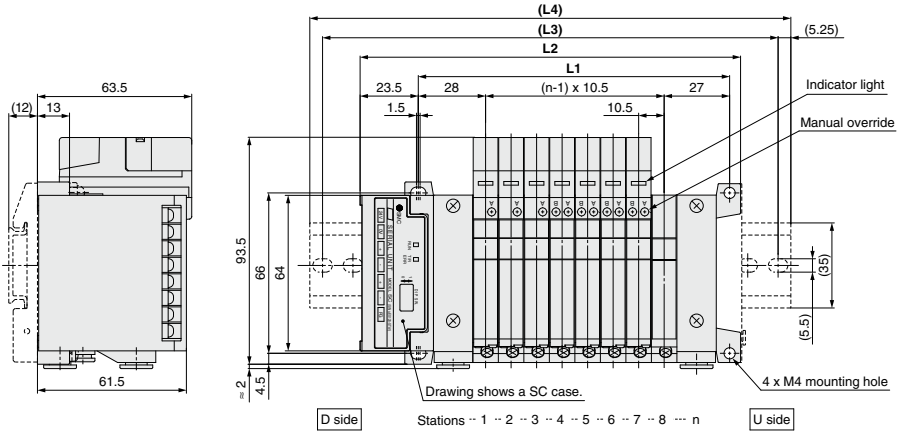

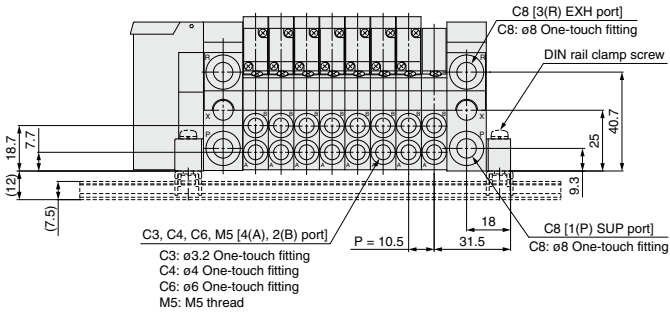

Dimensions

Dust-protected SI unit: L5 = 10.5n + 97, L6 = L3 + 25, L7 = L4 + 25
Formula L1 = 10.5n + 44.5, L2 = 10.5n + 72.5 n: Station (Maximum 16 stations)

L \ n	2	3	4	5	6	7	8	9	10	11	12	13	14	15	16
L1	65.5	76	86.5	97	107.5	118	128.5	139	149.5	160	170.5	181	191.5	202	212.5
L2	93.5	104	114.5	125	135.5	146	156.5	167	177.5	188	198.5	209	219.5	230	240.5
(L3)	125	125	137.5	150	162.5	175	187.5	187.5	200	212.5	225	237.5	250	250	262.5
(L4)	135.5	135.5	148	160.5	173	185.5	198	198	210.5	223	235.5	248	260.5	260.5	273

The dashed lines indicate DIN rail mounting [-D] (with DIN rail mounting bracket).

10-21-VV5Q21

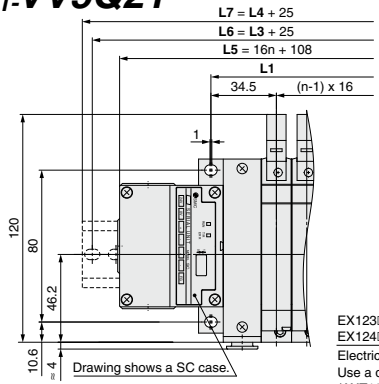

Dust-protected SI unit

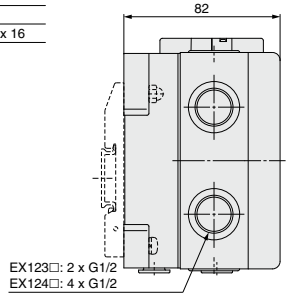

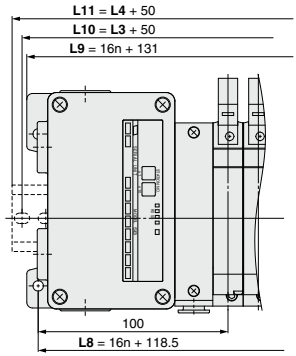

Dust-tight, Water-jet-proof (IP65) SI unit
(EX123/124 Integrated-type (output) serial transmission system)

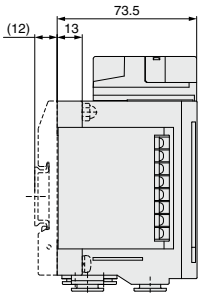

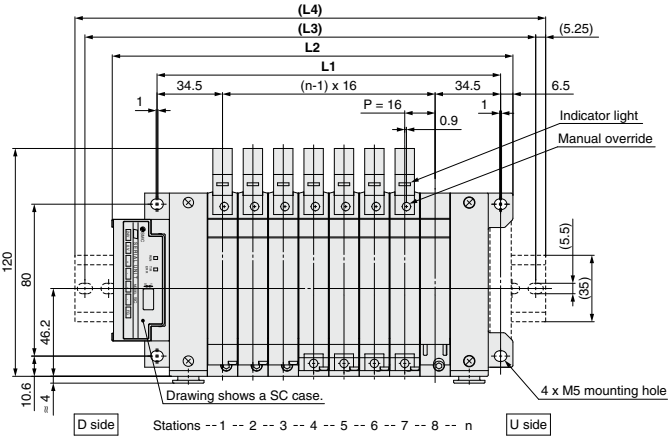

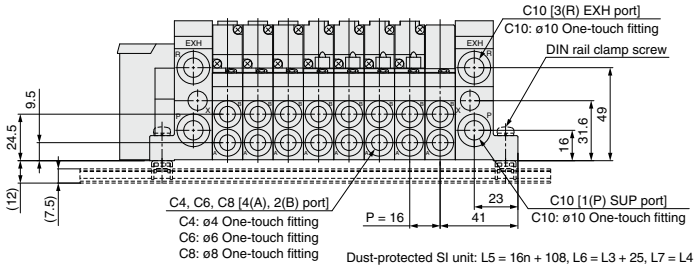

Dust-protected SI unit: L5 = 16n + 108, L6 = L3 + 25, L7 = L4 + 25
Dust-tight, Water-jet-proof SI unit: L8 = 16n + 118.5, L9 = 16n + 131
L10 = L3 + 50, L11 = L4 + 50
Formula L1 = 16n + 53, L2 = 16n + 83 n: Station (Maximum 16 stations)

Dimensions

L \ n	2	3	4	5	6	7	8	9	10	11	12	13	14	15	16
L1	85	101	117	133	149	165	181	197	213	229	245	261	277	293	309
L2	115	131	147	163	179	195	211	227	243	259	275	291	307	323	339
(L3)	137.5	162.5	175	187.5	200	225	237.5	250	262.5	287.5	300	312.5	337.5	350	362.5
(L4)	148	173	185.5	198	210.5	235.5	248	260.5	273	298	310.5	323	348	360.5	373

S Series 10-/21- VQ2000

kit (Serial transmission): For EX240 Integrated-type (I/O) serial transmission system IP65 compliant

VQ2000 only

- **The serial transmission system reduces wiring work, while minimizing wiring and saving space.**

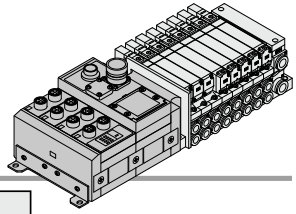

[Option]

How to Order Manifold

10 – VV5Q21 – 08 C6 S D QW 1 □ – N W – □

VQ2000 Plug-in series

10	Clean series
21	Copper/Fluorine/Silicone free + Low particle generation

Stations

01	1 station
⋮	⋮
16	16 stations

Cylinder port

Symbol	Port size
C4 Note 1)	With ø4 One-touch fitting
C6 Note 1)	With ø6 One-touch fitting
C8 Note 1)	With ø8 One-touch fitting
CM Note 2) Note 3)	Mixed sizes and with port plug
MM Note 4)	Mixed size for different types of piping, option installed

Note 1) Insert "L" (Top ported) or "B" (Bottom ported) for elbow type.
Example) B6 (Bottom ported elbow with ø6 one-touch fitting)
Note 2) Indicate "LM" for models with elbow fittings and mixed cylinder port sizes.
Note 3) Indicate "Mixed sizes and with port plug" by means of the manifold specification sheet.
Note 4) When selecting the mixed size for different types of piping, dual flow fitting assembly, or double check block (direct mounting), enter "MM" and give instructions on the manifold specification sheet.
Note 5) Inch-size One-touch fittings are available. Refer to "Semi-standard" on page 563 for details.

SI unit mounting
D: D side mounting

CE compliant

Nil	—
Q	CE compliant

Enclosure
IP65 (Dust-tight, Water-jet-proof)

Option

Symbol	Option
Nil	None
B	With back pressure check valve
K	Special wiring spec. (Except double wiring)
N	With name plate
R	External pilot

Note) When two or more symbols are specified, indicate them alphabetically.
Example: -BNR

Input block type

Nil	PNP sensor input (+COM) or without SI unit/input block
N	NPN sensor input (–COM)

Number of input blocks

Nil	Without SI unit
0	Without input block
1	With 1 pc. input block
2	With 2 pcs. input blocks
3	With 3 pcs. input blocks
4	With 4 pcs. input blocks

Model

0W	Without SI unit	
QW	DeviceNet™	+COM.
NWN	PROFIBUS-DP	–COM.

Note) Only +COM is available for DeviceNet™. Order a mounting valve with +COM. Since PROFIBUS is –COM only, order –COM for valves to be mounted.

Refer to the **WEB catalog** for details on the EX240 integrated-type (I/O) serial transmission system.

How to Order Manifold

10 – VQ 2 1 0 0 □ – 5 □ W 1 – □

10	Clean series
21	Copper/Fluorine/Silicone free + Low particle generation

Actuation type

1	2-position single
2	2-position double
3	3-position closed center
4	3-position exhaust center
5	3-position pressure center

Seal

0	Metal seal
1	Rubber seal

Note) For external pilot and negative common specifications, refer to "Semi-standard" on pages 562 to 563.

Function

Symbol	Specifications	DC
Nil	Standard	(0.4 W) ○
B	High-speed response type	(0.95 W) ○
K Note 1)	High-pressure type (1.0 MPa)	(0.95 W) ○
N Note 2)	Negative common	○
R Note 2)	External pilot	○

Manual override

Nil	Non-locking push type (Tool required)
B	Locking type (Tool required)
C	Locking type (Manual)
D	Slide locking type (Manual)

Coil voltage

5	24 VDC, With indicator light/surge voltage suppressor

Note 1) Metal seal only
Note 2) For external pilot and negative common specifications, refer to "Semi-standard" on pages 562 to 563.
Note 3) When a valve is compatible with PROFIBUS DP, the SI unit is negative common. Select valves for negative common.
Note 4) When two or more symbols are specified, indicate them alphabetically. Combination of [B] and [K] is not possible.

Enclosure
IP65 (Dust-tight, Water-jet-proof)

CE compliant

Nil	—
Q	CE compliant

∗ Refer to "SI Unit Part No." when ordering the CE-compliant SI unit.

⚠Caution

Use the standard (DC) specification when continuously energizing for long periods of time.

10-21-VV5Q21
(Serial transmission kit: EX240)

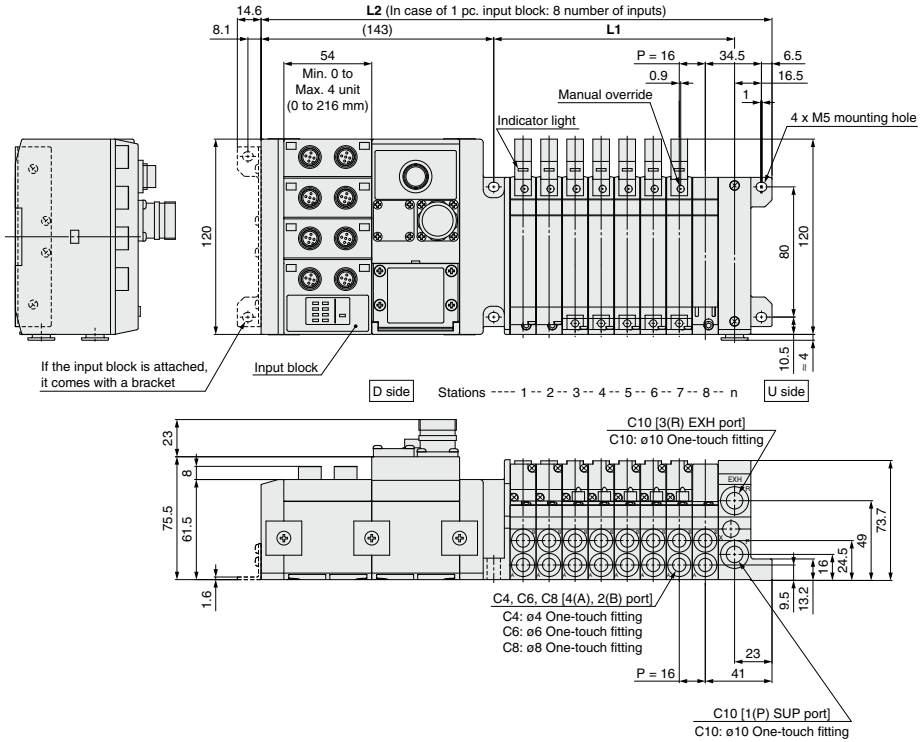

Formula L1 = 16n + 36.5 L2 = 16n + 186 (In case of 1 pc. DI unit, 54 mm will be added for increasing every 1 pc.)
n: Station (Maximum 24 stations)

Dimensions

L \ n	2	3	4	5	6	7	8	9	10	11	12	13	14	15	16	17	18	19	20	21	22	23	24
L1	68.5	84.5	100.5	116.5	132.5	148.5	164.5	180.5	196.5	212.5	228.5	244.5	260.5	276.5	292.5	308.5	324.5	340.5	356.5	372.5	388.5	404.5	420.5
L2	218	234	250	266	282	298	314	330	346	362	378	394	410	426	442	458	474	490	506	522	538	554	570

M Series 10-/21- VQ2000
kit (Circular connector)

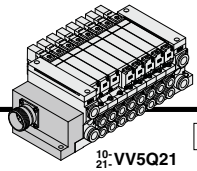

VQ2000 only

- **MIL flat cable connector reduces installation labor for electrical connection.**
- **Manifold and connectors, both compliant with the IP65 rating (Dust-tight, Water-jet-proof), provide a high-degree of protection for the electrical parts.**
- **Maximum stations are 24.**

Manifold Specifications

Series	Piping specifications			Applicable stations
	Piping direction	Port size		
		1(P), 3(R)	4(A), 2(B)	
10-/21- VQ2000	Side	C10	C4, C6, M8	Max. 24 stations

Circular Connector (26 Pins)

Cable Assembly ●

AXT100-MC26-015/030/050

(Circular connector cable assembly included in a specific manifold model no. Refer to "How to Order Manifold.")

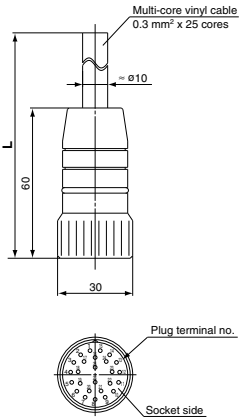

Circular connector cable assembly

Cable length (L)	Assembly part no.	Note
1.5 m	AXT100-MC26-015	Cable 25-core x 24AWG
3 m	AXT100-MC26-030	
5 m	AXT100-MC26-050	

∗ Cannot be used for transfer wiring.

Electrical characteristics

Item	Property
Conductor resistance Ω/km, 20°C	65 or less
Voltage limit V, 1 minute, AC	1000
Insulation resistance MΩ/km, 20°C	5 or more

Note) The minimum bending radius of the circular connector cable is 20 mm.

Circular connector cable assembly terminal no.

Terminal no.	Lead wire color	Dot marking
1	Black	None
2	Brown	None
3	Red	None
4	Orange	None
5	Yellow	None
6	Pink	None
7	Blue	None
8	Purple	White
9	Gray	Black
10	White	Black
11	White	Red
12	Yellow	Red
13	Orange	Red
14	Yellow	Black
15	Pink	Black
16	Blue	White
17	Purple	None
18	Gray	None
19	Orange	Black
20	Red	White
21	Brown	White
22	Pink	Red
23	Gray	Red
24	Black	White
25	White	None
26	White	None

Note) Lengths other than the above are also available. Please contact SMC for details.

How to Order Manifold

Note) For CE compliant models, DC-type only. CE [Option]

10 – VV5Q 2 1 – 08 C6 M 1 – N – □

10

10	Clean series
21	Copper/Fluorine/Silicone free + Low particle generation

Series ●

2	VQ2000

Manifold ●

1	Plug-in unit

Stations ●

02	2 stations
⋮	⋮
24	24 stations

Note) Refer to page 562 for details.

Cylinder port ●

Symbol	Port size
C4 Note 1)	With ø4 One-touch fitting
C6 Note 1)	With ø6 One-touch fitting
C8 Note 1)	With ø8 One-touch fitting
CM Note 2) Note 3)	Mixed sizes and with port plug
MM Note 4)	Mixed size for different types of piping, option installed

Note 1) Insert "L" (Top ported) or "B" (Bottom ported) for elbow type. Example) B6 (Bottom ported elbow with ø6 One-touch fitting)
Note 2) Indicate "LM" for models with elbow fittings and mixed cylinder port sizes.
Note 3) Indicate "Mixed sizes and with port plug" by means of the manifold specification sheet.
Note 4) When selecting the mixed size for different types of piping, dual flow fitting assembly, or double check block (direct mounting), enter "MM" and give instructions on the manifold specification sheet.
Note 5) Inch-size One-touch fittings are available. Refer to "Semi-standard" on page 563 for details.

Cable (Length) ●

0	Without cable
1	With cable (1.5 m)
2	With cable (3 m)
3	With cable (5 m)

Option ●

Symbol	Option
Nil	None
B Note 2)	With back pressure check valve
D	DIN rail mounting
D0	With DIN rail bracket (Without DIN rail)
D□ Note 3)	DIN rail mounting (□: Stations 02 to 24)
K Note 4)	Special wiring spec. (Except double wiring)
N	With name plate
R Note 5)	External pilot
W	Enclosure: Dust-tight, Water-jet-proof (IP65)

Note 1) When two or more symbols are specified, indicate them alphabetically. Example) -BKR
Note 2) Models with a suffix "-B" have check valves for prevention of back pressure at all manifold stations. When a back pressure check valve is desired, and is to be installed only in certain manifold stations, specify the mounting position by means of the manifold specification sheet.
Note 3) The number of stations that may be displayed is longer than the manifold number of stations.
Note 4) Specify the wiring specifications by means of the manifold specification sheet.
Note 5) Indicate "R" for the valve with external pilot.

CE compliant ●

Nil	—
Q	CE compliant

Note) For CE compliant models, DC-type only.

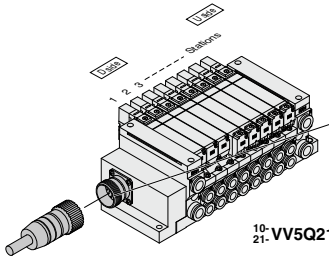

The total number of stations is tabulated starting from station one on the D-side.

Electrical Wiring Specifications

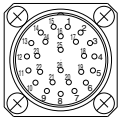

As the standard electrical wiring specifications, double wiring (connected to SOL.A and SOL.B) is adopted for the internal wiring of each station for 12 stations or less, regardless of valve and option types.
Mixed single and double wiring is available as semi-standard. Refer to page 562 for details.

Circular connector cable assembly
AXT100-MC26-015 / 030 / 050 Wire color

		Terminal no.	Polarity		Lead wire color	Dot marking
Station 1	SOL.A	1	(–)	(+)	Black	None
	SOL.B	2	(–)	(+)	Brown	None
Station 2	SOL.A	3	(–)	(+)	Red	None
	SOL.B	4	(–)	(+)	Orange	None
Station 3	SOL.A	5	(–)	(+)	Yellow	None
	SOL.B	6	(–)	(+)	Pink	None
Station 4	SOL.A	7	(–)	(+)	Blue	None
	SOL.B	8	(–)	(+)	Purple	White
Station 5	SOL.A	9	(–)	(+)	Gray	Black
	SOL.B	10	(–)	(+)	White	Black
Station 6	SOL.A	11	(–)	(+)	White	Red
	SOL.B	12	(–)	(+)	Yellow	Red
Station 7	SOL.A	13	(–)	(+)	Orange	Red
	SOL.B	14	(–)	(+)	Yellow	Black
Station 8	SOL.A	15	(–)	(+)	Pink	Black
	SOL.B	16	(–)	(+)	Blue	White
Station 9	SOL.A	17	(–)	(+)	Purple	None
	SOL.B	18	(–)	(+)	Gray	None
Station 10	SOL.A	19	(–)	(+)	Orange	Black
	SOL.B	20	(–)	(+)	Red	White
Station 11	SOL.A	21	(–)	(+)	Brown	White
	SOL.B	22	(–)	(+)	Pink	Red
Station 12	SOL.A	23	(–)	(+)	Gray	Red
	SOL.B	24	(–)	(+)	Black	White
(Max.)	COM.	25	(+)	Note) (–)	White	None
	COM.	26	(+)	(–)	White	None
			Positive COM spec.	**Negative COM spec.**		

Note) When using the negative common specifications, use valves for negative common. (Refer to page 562.)
Refer to "Semi-standard" on page 562 for details.

How to Order Valve

Note) For CE compliant models, DC-type only. CE [Option]

10 – VQ 2 1 0 0 □ – 5 □ □ □ 1 – □

Series

2	VQ2000

10	Clean series
21	Copper/Fluorine/Silicone free + Low particle generation

Actuation type

1	2-position single
2	2-position double
3	3-position closed center
4	3-position exhaust center
5	3-position pressure center

Seal

0	Metal seal
1	Rubber seal

Function

Symbol	Specifications	DC	AC
Nil	Standard	(0.4 W) ○	○ Note 1)
B	High-speed response type	(0.95 W) ○	—
K Note 2)	High-pressure type (1.0 MPa)	(0.95 W) ○	—
N Note 3)	Negative common	○	—
R Note 3)	External pilot	○	○

Note 1) For power consumption of AC type, refer to page 522.
Note 2) Metal seal only
Note 3) For external pilot and negative common specifications, refer to "Semi-standard" on pages 562 to 563.
Note 4) When two or more symbols are specified, indicate them alphabetically. Combination of [B] and [K] is not possible.

CE compliant

Nil	—
Q	CE compliant

Note) For CE compliant models, DC-type only.

Enclosure

Nil	Dust-protected
W	Dust-tight, Water-jet-proof (IP65)

Manual override

Nil	Non-locking push type (Tool required)
B	Locking type (Tool required)
C	Locking type (Manual)
D	Slide locking type (Manual)

Light/surge voltage suppressor

Nil	Yes
E	None

Coil voltage

		CE compliant
1	100 VAC (50/60 Hz)	—
3	110 VAC (50/60 Hz)	—
5	24 VDC	●
6	12 VDC	●

⚠Caution

Use the standard (DC) specification when continuously energizing for long periods of time.

How to Order Manifold Assembly

Specify the part numbers for valves and options together beneath the manifold base part number.

<Example>

Circular connector kit with cable (3 m)

10-VV5Q21-09C6M2-W ··· 1 set–Manifold base part no.
***10-VQ2100-51 ····· 3 sets–Valve part no. (Stations 1 to 3)**
***10-VQ2200-51 ····· 3 sets–Valve part no. (Stations 4 to 6)**
***10-VQ2300-51 ····· 2 sets–Valve part no. (Stations 7 to 8)**
***VVQ2000-10A-1 ·· 1 set–Blanking plate part no. (Station 9)**

Prefix the asterisk to the part no. of the solenoid valve, etc.

Write sequentially from the 1st station on the D-side.
When part no. written collectively are complicated, specify them by means of the manifold specification sheet.

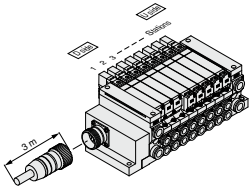

10-/21-VV5Q21

< >: AC
The dashed lines and dimensions in parentheses indicate DIN rail mounting [-D].

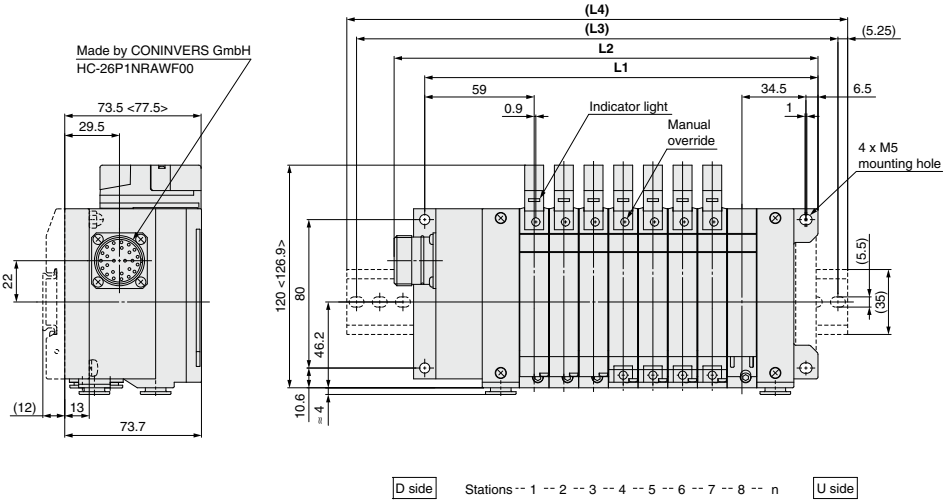

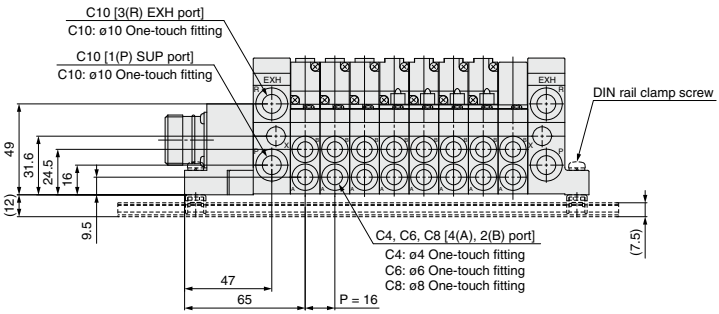

Dimensions

Formula L1 = 16n + 77.5, L2 = 16n + 100.5 n: Station (Maximum 12 stations)

L \ n	2	3	4	5	6	7	8	9	10	11	12
L1	109.5	125.5	141.5	157.5	173.5	189.5	205.5	221.5	237.5	253.5	269.5
L2	132.5	148.5	164.5	180.5	196.5	212.5	228.5	244.5	260.5	276.5	292.5
(L3)	162.5	175	187.5	200	225	237.5	250	275	287.5	300	312.5
(L4)	173	185.5	198	210.5	235.5	248	260.5	285.5	298	310.5	323

How to Order

Note) For CE compliant models, DC-type only. CE [Option]

IP65 enclosure in standard specifications

Easy-to-use terminal block

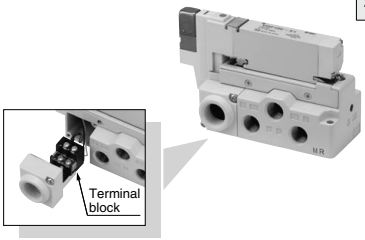

In the case of (Valve) + (Sub-plate)

10 − VQ2 1 0 0 − 5 W 1 − 02 □ − □

Entry is the same as standard products.

10	Clean series
21	Copper/Fluorine/Silicone free + Low particle generation

Enclosure

Nil	Dust-protected
W Note 1)	IP65 (Dust-tight, Water-jet-proof)

Note 1) Valves are IP65 specifications.
Note 2) When the valve is a standard (dust-protected) specification, it is not compatible with 200 or 220 VAC.

Port size

02	1/4

Thread type

Nil	Rc
N	NPT
T	NPTF
F	G

CE compliant

Nil	—
Q	CE compliant

Note) For CE compliant models, DC-type only.

In the case of (Sub-plate) alone

VQ2000 − PW − 02

Dimensions

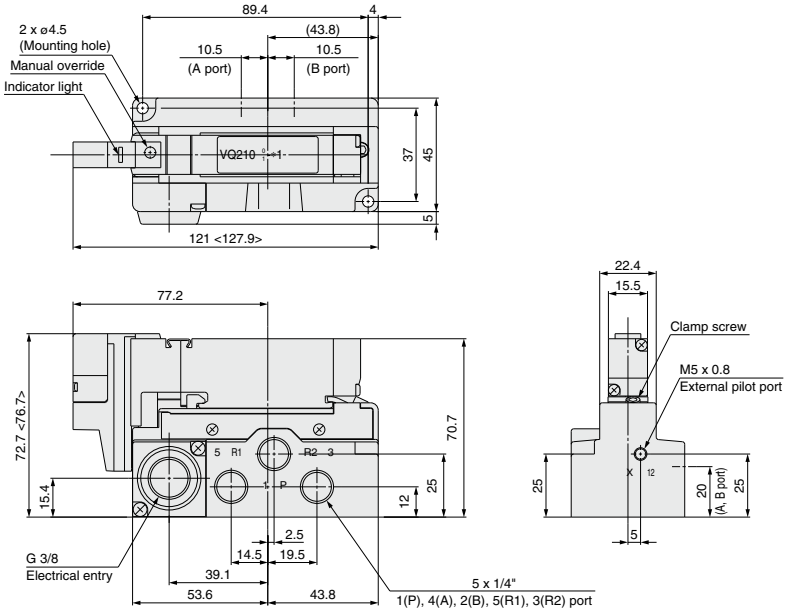

< >: AC
Note) When using this valve for IP65, mount a seal connector to the electrical entry.

Semi-standard

Different Number of Connector Pins

F and P kits with the following number of pins are available besides the standard number (F = 25P; P = 26P). Select the desired number of pins and cable length from the cable assembly list. Place an order for the cable assembly separately.

F kit (D-sub connector) 15 pins

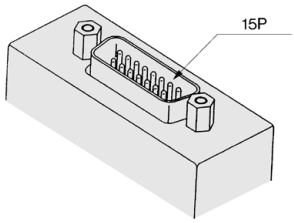

How to Order Manifold

10-21-VV5Q11– 06 C6 F SA – ☐

Option

Stations

Cylinder port

How to Order
D-sub connector, 15 pins
Connector location–Side
Without cable

Kit type/Electrical entry

Pins \ Location	Top entry		Side entry	
15P (Max. 7 stations)	**F** kit	**UA**	**F** kit	**SA**

∗ In the same way as the 25-pin models (standard), the terminal no. 1 is for SOL.A at the 1st station, the terminal no. 9 for SOL.B at the 1st station, and the terminal no. 8 for COM.

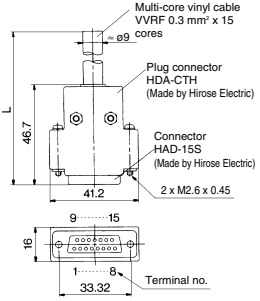

Wire Color Table by Terminal No. of D-sub Connector Cable Assembly

Terminal no.	Lead wire color	Dot marking
1	Black	None
2	Brown	None
3	Red	None
4	Orange	None
5	Yellow	None
6	Pink	None
7	Blue	None
8	Purple	White
9	Gray	Black
10	White	Black
11	White	Red
12	Yellow	Red
13	Orange	Red
14	Yellow	Black
15	Pink	Black

D-sub Connector Cable Assembly

Cable length (L) \ Pins	15P
1.5 m	AXT100-DS15-1
3 m	AXT100-DS15-2
5 m	AXT100-DS15-3

∗ For other commercial connectors, use a type conforming to MIL-C-24308.

P kit (Flat ribbon cable) 10/16/20 pins

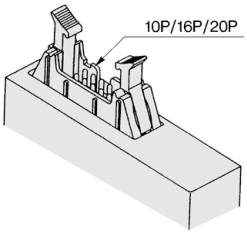

How to Order Manifold

10-21-VV5Q11– 06 C6 P SC – ☐

Option

Stations

Cylinder port

How to Order
Flat ribbon cable, 20 pins
Connector location–Side
Without cable

Kit type/Electrical entry

Pins \ Location	Top entry		Side entry	
10P (Max. 4 stations)	**P** kit	**UA**	**P** kit	**SA**
16P (Max. 7 stations)		**UB**		**SB**
20P (Max. 9 stations)		**UC**		**SC**

∗ In the same way as the 26-pin models (standard), the terminal no. 1 is for SOL.A at the 1st station, the terminal no. 2 for SOL.B at the 1st station, and two pins from the max. terminal numbers are for COM.

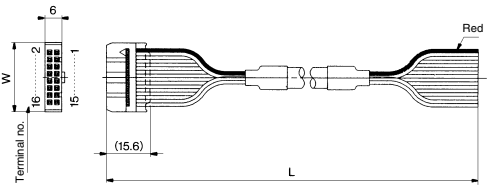

Flat Ribbon Cable Assembly

Cable length (L) \ Pins	10P	16P	20P
1.5 m	AXT100-FC10-1	AXT100-FC16-1	AXT100-FC20-1
3 m	AXT100-FC10-2	AXT100-FC16-2	AXT100-FC20-2
5 m	AXT100-FC10-3	AXT100-FC16-3	AXT100-FC20-3
Connector width (**W**)	17.2	24.8	30

∗ For other commercial connectors, use a type with strain relief conforming to MIL-C-83503.

Special Wiring Specifications

In the internal wiring of F/P/J/G/T/S kit, double wiring (connected to SOL.A and SOL.B) is adopted for each station regardless of the valve and option types. Mixed single and double wiring is available as an option.

1. How to Order

Indicate an option symbol "-K", for the manifold no. and be sure to specify the mounting position and number of stations of the single and double wiring by means of the manifold specification sheet.

10-/21-VV5Q11−08C6FU1−D K S

Others, option symbols: to be indicated alphabetically.

2. Wiring specifications

With the A side solenoid of the 1st station as no.1 (meaning, to be connected to no.1 terminal), without making any terminals vacant.

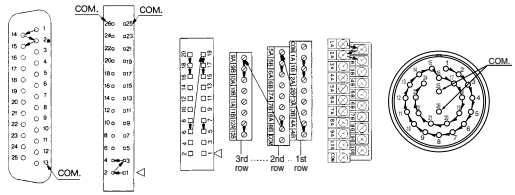

F kit D-sub connector (25P) | P kit Flat ribbon cable connector (26P) | J/G kit | T kit Terminal block (VQ1000, 24 terminals) | T kit Terminal block (VQ2000) | M kit

3. Max. number of stations

The maximum number of stations depends upon the number of solenoids. Assuming one for a single and two for a double, determine the number of stations so that the total number is not more than the max. number given in the following table.

Kit	F kit (D-sub connector)		P kit (Flat ribbon cable)				J kit (Flat ribbon cable)	G kit (Flat ribbon cable with terminal block)
Type	F U/S □ 25P	F U/S A 15P	P U/S □ 26P	P U/S C 20P	P U/S B 16P	P U/S A 10P	J U/S □ 20P	G□
Max. points	24	14	24	18	14	8	16	16

Kit	T kit (Terminal block box)			S kit (Serial transmission)	M kit (Circular connector)
Type	10-/21-VQ1000	2 rows of terminal blocks	3 rows of terminal blocks	S□	M□
		16	24		
Max. points	10-/21-VQ2000	20		16	24

Negative Common Specifications

Specify the valve model no. as shown below for negative common specification.
The manifold no. shown below is for the T (10-VQ1000) and L (10-VQ1000/2000) kits. For other kits the standard manifold can be used. However, negative common is not compatible with S (except EX510 gateway-type, EX240 integrated-type and EX120/121/122 integrated-type (CompoNet™)) and G kits.

How to Order Valve

10-/21-VQ1100 N −51

Negative common specifications

How to Order Manifold

T kit (VQ1000):

10-/21-VV5Q11− 06 C6 T N − □

- Option
- Negative common specifications
- Cylinder port
- Stations

L kit (VQ1000/2000):

10-/21-VV5Q11-/21- − 06 C6 L N 1 − □

- Stations
- Cylinder port
- Negative common specifications
- Electrical entry Cable length

0	With cable (0.6 m)
1	With cable (1.5 m)
2	With cable (3 m)

- Option

Semi-standard

External Pilot Specifications

When the supply air pressure is lower than the required minimum operating pressure (0.1 to 0.2 MPa) for the solenoid valve (or when the valve is used for vacuum), specify an external pilot model. Order a manifold or valve by suffixing the external pilot specification, "R". The X-port of the manifold base is equipped with One-touch fittings for external pilot.
VQ1000: C4 (ø4 One-touch fitting)
VQ2000: C6 (ø6 One-touch fitting)

How to Order Manifold

10-21-VV5Q11−08C6FU1−R S

External pilot specifications

Others, option symbols: to be indicated alphabetically.

How to Order Valve

10-21-VQ1100 R − 51

External pilot specifications

Note 1) When two or more functions are specified, indicate them alphabetically.
Note 2) Since the pilot EXH of this valve is released from the R1 passage, it is not possible to vacuum from a part other than EXH pressure and SUP ports.

Inch-size One-touch Fittings

The valve with inch-size One-touch fittings is shown below.

10-21-VV5Q11− 06 N7 PS0 − □

Stations

Option

Kit type/Electrical entry

Cylinder port

Symbol		N1	N3	N7	N9	M5T	NM
Applicable tubing O.D. (Inch)		ø1/8"	ø5/32"	ø1/4"	ø5/16"	10-32UNF (M5 thread)	Mixed
4(A), 2(B) port	VQ1000	●	●	●	—	●	●
	VQ2000	—	●	●	●	—	●

Note) When inch-size fittings are selected for the cylinder port, inch-size fittings are selected on 1(P), 3(R) port, too.

1(P), 3(R) port size
VQ1000 ..... ø5/16" (N9)
VQ2000 ..... ø3/8" (N11)

DIN Rail Mounting

Each manifold can be mounted on a DIN rail. Order it by indicating a DIN rail mounting option symbol, "-D". In this case, a DIN rail which is approx. 30 mm longer than the manifold with the specified number of stations is attached.

● **When DIN rail is unnecessary**
(DIN rail mounting brackets only are attached.)
Indicate the option symbol, -D0, for the manifold part number.

How to Order Manifold

10-21-VV5Q11−08C6FU1−D0S

Others, option symbols: to be indicated alphabetically.

● **When using DIN rail longer than the manifold with specified number of stations**
Clearly indicate the necessary number of stations next to the option symbol "-D" for the manifold part number.

How to Order Manifold

10-21-VV5Q11−08C6FU1−D09S

DIN rail for 9 stations

Others, option symbols: to be indicated alphabetically.

∗The number of stations that may be displayed is longer than the manifold number of stations.

● **When changing to a DIN rail mounting.**
Order brackets for mounting a DIN rail. (Refer to "Manifold Optional Parts" on pages 572 and 574.)

No. VVQ1000-57A (For VQ1000)
VVQ2000-57A (For VQ2000)
2 pcs. per one set.

● **When ordering DIN rail only**
DIN rail no.: AXT100-DR-□

∗ As for □, specify the number from the DIN rail table. Refer to the dimensions of each kit for L dimension.

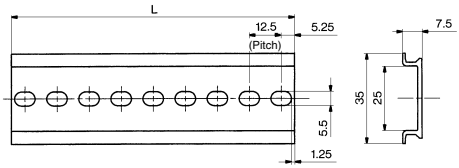

L Dimension L = 12.5 x n + 10.5

No.	1	2	3	4	5	6	7	8	9	10
L dimension	23	35.5	48	60.5	73	85.5	98	110.5	123	135.5
No.	11	12	13	14	15	16	17	18	19	20
L dimension	148	160.5	173	185.5	198	210.5	223	235.5	248	260.5
No.	21	22	23	24	25	26	27	28	29	30
L dimension	273	285.5	298	310.5	323	335.5	348	360.5	373	385.5
No.	31	32	33	34	35	36	37	38	39	40
L dimension	398	410.5	423	435.5	448	460.5	473	485.5	498	510.5

Construction

10-21-VQ1000 Plug-in Unit: Main Parts/Replacement Parts

Metal seal

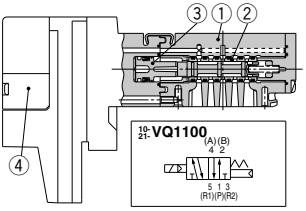

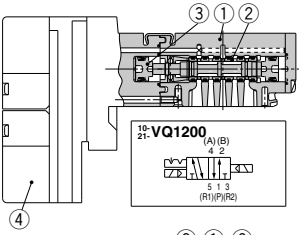

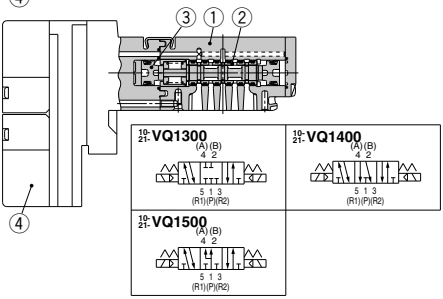

Component Parts

No.	Description	Material	Note
1	**Body**	Zinc die-casted	
2	**Spool/Sleeve**	Stainless steel	
3	**Piston**	Resin	
4	**Pilot valve assembly**	—	

Note) Refer to page 568 for “How to Order Pilot Valve Assembly”.

Rubber seal

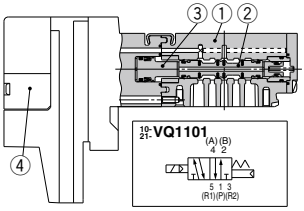

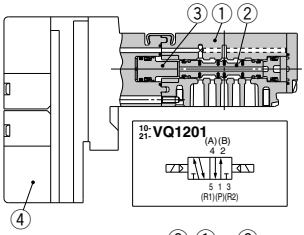

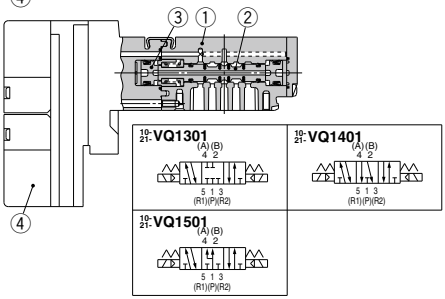

Component Parts

No.	Description	Material	Note
1	**Body**	Zinc die-casted	
2	**Spool valve**	Aluminum, HNBR	
3	**Piston**	Resin	
4	**Pilot valve assembly**	—	

Note) Refer to page 568 for “How to Order Pilot Valve Assembly”.

10-21-VQ2000 Plug-in Unit: Main Parts/Replacement Parts

Metal seal

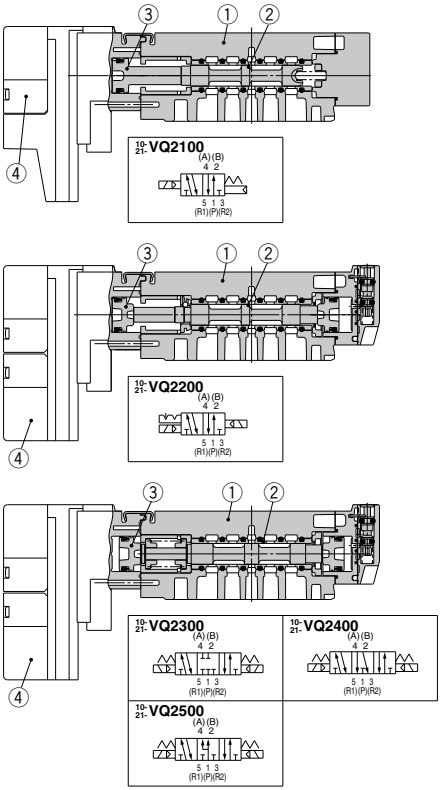

Rubber seal

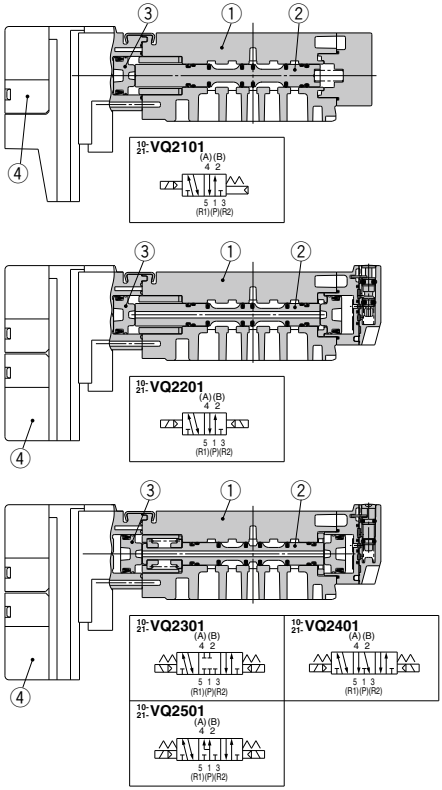

Component Parts

No.	Description	Material	Note
1	**Body**	Zinc die-casted	
2	**Spool/Sleeve**	Stainless steel	
3	**Piston**	Resin	
4	**Pilot valve assembly**	—	

Note) Refer to page 568 for “How to Order Pilot Valve Assembly”.

Component Parts

No.	Description	Material	Note
1	**Body**	Zinc die-casted	
2	**Spool valve**	Aluminum, HNBR	
3	**Piston**	Resin	
4	**Pilot valve assembly**	—	

Note) Refer to page 568 for “How to Order Pilot Valve Assembly”.

Exploded View of Manifold

10-21-VQ1000 Plug-in Unit: Exploded View

(F/P/J/L/S kit)

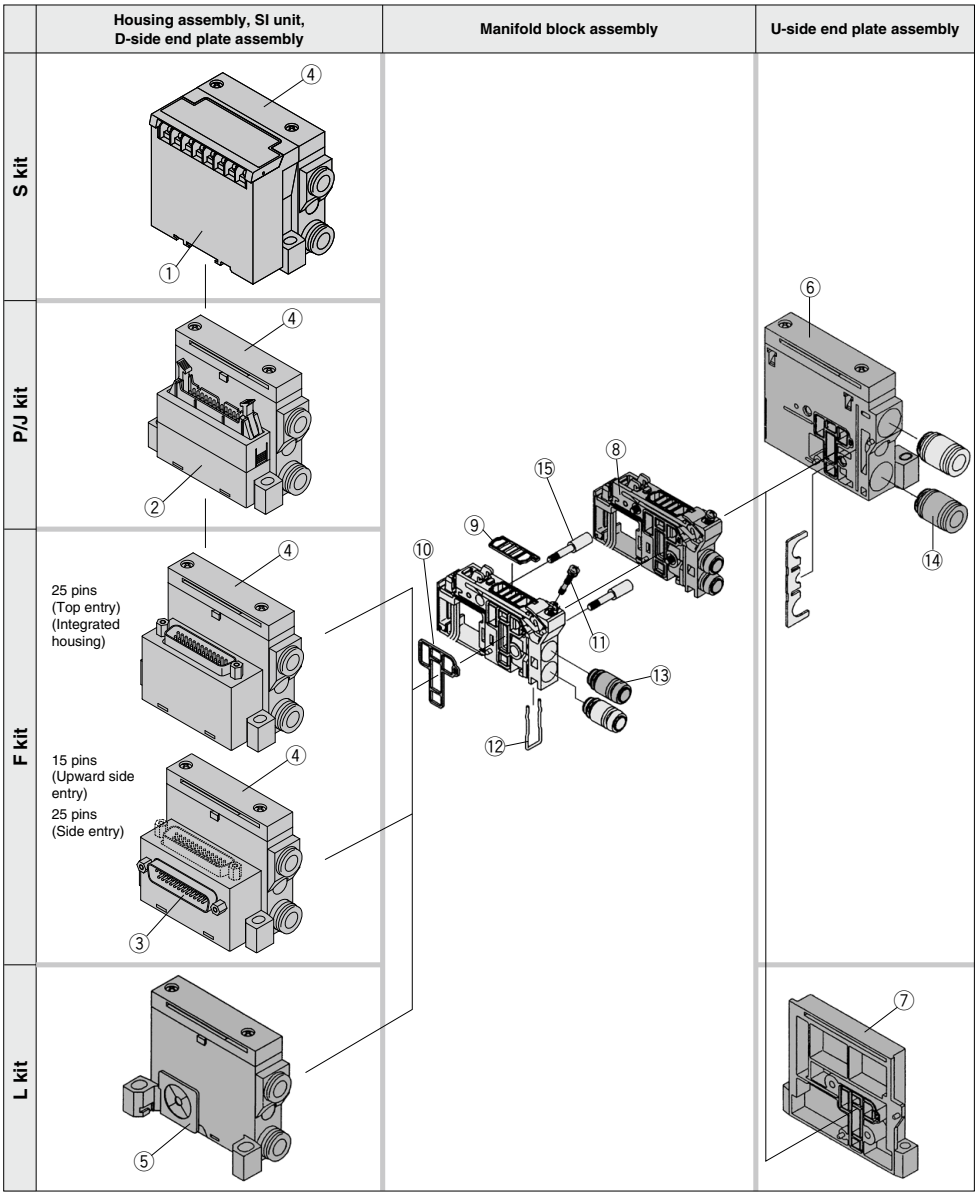

<Housing Assembly and SI Unit>

Housing assembly and SI unit no.

No.	Manifold	Part no.	Description
①	(SH kit)	**EX120-SUH1(-XP)** Note 2)	NKE Corp.: Fieldbus H System (16 outputs)
	(SQ kit)	**EX120-SDN1**	DeviceNet™
	(SR1 kit)	**EX120-SCS1(-XP)** Note 2)	OMRON Corp.: CompoBus/S (16 outputs)
	(SR2 kit)	**EX120-SCS2(-XP)** Note 2)	OMRON Corp.: CompoBus/S (8 outputs)
	(SV kit)	**EX120-SMJ1(-XP)** Note 2)	CC-Link
	(SZB kit)	**EX120-SCM1**	CompoNet™ (Positive common)
	(SZBN kit)	**EX120-SCM3**	CompoNet™ (Negative common)
②	P^{U}_{S} kit	**AXT100-1-P^{U}_{S}□** Note 1)	Flat ribbon cable housing assembly □ = Number of pins: 26/20/16/10
	J^{U}_{S} kit	**AXT100-1-J^{U}_{S}20** Note 1)	Flat ribbon cable housing assembly
③	FU kit	**AXT100-1-FU15**	D-sub connector housing assembly (Top entry) Number of pins: 15
	FS kit	**AXT100-1-FS□**	D-sub connector housing assembly (Side entry) □ = Number of pins: 25/15

Note 1) Top entry connector for PU, JU while side entry connector for PS, JS.
Note 2) Suffix "-XP" to the end of the part number for dust-protected SI unit. (Not available for S/SQ kit)

<D-Side End Plate Assembly>

④⑤ D-side end plate assembly no.

VVQ1000-3A-1-□-□

Electrical entry

FU25	For F kit top entry 25 pins
F	For F kit other than above
P	For P kit
J	For J kit
L	For L kit
S	For S kit

Option

Nil	Common EXH
R Note 1)	External pilot
S Note 1)	Direct EXH outlet with built-in silencer

Note 1) When both options are specified, indicate as RS.
Note 2) The housing assembly and SI unit of F/P/J/S kit are not included (except FU25). Separately place an order for ①, ②, ③.

<Manifold Block Assembly>

⑧ Manifold block assembly no.

Tie-rod (2 pcs.) and lead wire assembly for extensions are attached.

VVQ1000-1A-□-□

Electrical entry

F0	Without lead wire
F1	F kit for 2 to 12 stations/Double wiring
F2	F kit for 13 to 24 stations/Double wiring
F3	F kit for 2 to 24 stations/Single wiring
P1	P/J/S kit for 2 to 12 stations/Double wiring
P2	P/J/S kit for 13 to 24 stations/Double wiring
P3	P/J/S kit for 2 to 24 stations/Single wiring
L0□	L0 kit □: Stations (1 to 8)
L1□	L1 kit □: Stations (1 to 8)
L2□	L2 kit □: Stations (1 to 8)

Port size

C3	With ø3.2 One-touch fitting
C4	With ø4 One-touch fitting
C6	With ø6 One-touch fitting
M5	M5 thread
C0	Without One-touch fitting (With clip)

<Replacement Parts for Manifold Block>

Replacement Parts

No.	Part no.	Description	Material	Quantity
⑨	**VVQ1000-80A-1**	Gasket	HNBR	12
⑩	**VVQ1000-80A-2**	Seal	HNBR	12
⑪	**VVQ1000-80A-3**	Clamp screw	Carbon steel	12
⑫	**VVQ1000-80A-4**	Clip	Stainless steel	12

Note) A set of parts containing 12 pcs. each is enclosed.

<U-Side End Plate Assembly>

⑥ U-side end plate assembly no. (For F/P/J/S kit)

VVQ1000-2A-1-□

Option

Nil	Common EXH
R	External pilot
S	Direct EXH outlet with built-in silencer

Note) The ⑭'s fitting assembly is included.

⑦ U-side end plate assembly no. (For L kit)

VVQ1000-2A-1-L

<Fitting Assembly>

⑬ Fitting assembly part no. (For cylinder port)

VVQ1000-50A-□

Note) Purchase orders are available in units of 10 pieces.

Port size

C3	Applicable tubing ø3.2
C4	Applicable tubing ø4
C6	Applicable tubing ø6
M5	M5 thread

⑭ Fitting assembly part no. (For 1(P), 3(R) port)

VVQ1000-51A-C8

Applicable tubing ø8

Note) Purchase orders are available in units of 10 pieces.

⑮ Tie-rod assembly part no. (2 pcs./set)

VVQ1000-TR-□

Note 1) Please order when eliminating manifold stations.
When adding stations, tie-rods are attached to the manifold block assembly. Therefore, it is not necessary to order.
Note 2) □: Stations 02 to 24
Note 3) For S/P/J/F/L kit

Pilot valve assembly

10-/21-V112□-□□

Function

Symbol	Specifications	DC	AC
Nil	Standard	(0.4 W) ○	Note 1) ○
B	High-speed response type	(0.95 W) ○	—
K	High-pressure type (1.0 MPa)	(0.95 W) ○	—

Coil voltage

1	100 VAC (50/60 Hz)
2	200 VAC (50/60 Hz)
3	110 VAC (50/60 Hz)
4	220 VAC (50/60 Hz)
5	24 VDC
6	12 VDC

Enclosure

A	Dust-tight, Water-jet-proof (IP65)
B	Dust-protected

Note 1) Refer to page 522 for power consumption of AC type.
Note 2) Common to single solenoid and double solenoid

10-21-VQ2000 Plug-in Unit: Exploded View

(F/P/J/L/G/S kit)

	Housing assembly and SI unit	D-side end plate assembly	Manifold block assembly	U-side end plate assembly
S kit	①			
P/J kit	②			
F kit	③	⑤		
G kit	④			
L kit		⑥		⑧

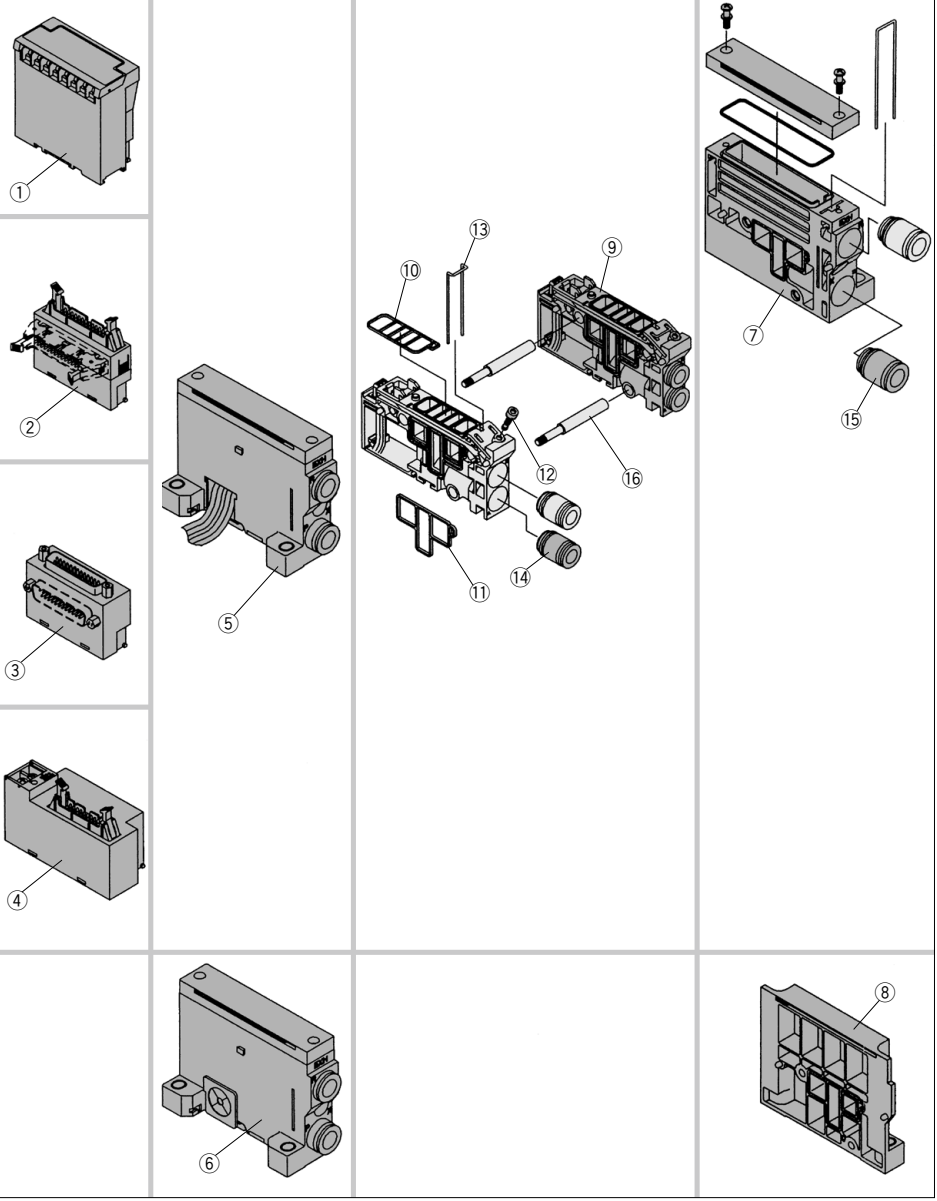

<Housing Assembly and SI Unit>

Housing assembly and SI unit no.

No.	Manifold	Part no.	Description
①	(SH kit)	**EX120-SUH1(-XP)** Note 1) **[EX123D-SUH1]** Note 2)	NKE Corp.: Fieldbus H System (16 outputs)
	(SQ kit)	**EX120-SDN1 [EX124D-SDN1]** Note 2)	DeviceNet™
	(SR1 kit)	**EX120-SCS1(-XP)** Note 1) **[EX124D-SCS1]** Note 2)	OMRON Corp.: CompoBus/S (16 outputs)
	(SR2 kit)	**EX120-SCS2(-XP)** Note 1) **[EX124D-SCS2]** Note 2)	OMRON Corp.: CompoBus/S (8 outputs)
	(SV kit)	**EX120-SMJ1(-XP)** Note 1) **[EX124D-SMJ1]** Note 2)	CC-Link
	(SZB kit)	**EX120-SCM1**	CompoNet™ (Positive common)
	(SZBN kit)	**EX120-SCM3**	CompoNet™ (Negative common)
②	P^{U}_{S} kit	**AXT100-1-P^{U}_{S}□** Note 3)	Flat ribbon cable housing assembly □: Number of pins: 26/20/16/10
	J^{U}_{S} kit	**AXT100-1-J^{U}_{S}20** Note 3)	Flat ribbon cable housing assembly
③	F^{U}_{S} kit	**AXT100-1-F^{U}_{S}□** Note 3)	D-sub connector housing assembly □: Number of pins: 25/15
④	G kit	**AXT100-1-GU20**	Flat ribbon cable housing assembly with terminal block

Note 1) Suffix "-XP" to the end of the part number for dust-protected SI unit.
Note 2) Dust-tight, Water-jet-proof (IP65)
Note 3) Top entry connector for FU, PU, JU while side entry connector for FS, PS, JS.

<D-Side End Plate Assembly>

⑤⑥ D-side end plate assembly no.

VVQ2000-3A-1-□-□□

Electrical entry

F	For F kit
P	For P kit
J	For J kit
L	For L kit
G	For G kit
S	For S kit

Enclosure

Nil	Dust-protected
W	Dust-tight, Water-jet-proof (IP65)

Note) F/P/J/G kit are available with "Nil" only.
M kit is available with [W] only.
S/L/T kit are selectable depending on the manifold type.

Option

Nil	Common EXH
R Note 1)	External pilot
S Note 1)	Direct EXH outlet with built-in silencer

Note 1) When both options are specified, indicate as RS.
Note 2) The housing assembly and SI unit of F/P/J/G/S kit are not included.
Separately place an order for ①, ②, ③, ④.
Note 3) "S" (Built-in silencer) and "W" (IP65) cannot be combined.

<U-Side End Plate Assembly>

⑦ U-side end plate assembly no. (For F/P/J/G/T/S/M kit)

VVQ2000-2A-1-□□

Option

Nil	Common EXH
R	External pilot
S	Direct EXH outlet with built-in silencer

Enclosure

Nil	Dust-protected
W	Dust-tight, Water-jet-proof (IP65)

Note) F/P/J/G kit are available with "Nil" only.
M kit is available with [W] only.
S/T kit are selectable depending on the manifold type.

Note 1) The ⑮'s fitting assembly is included.
Note 2) The housing assembly and SI unit of F/P/J/G/S kit are not included.
Separately place an order for ①, ②, ③, ④.
Note 3) "S" (Built-in silencer) and "W" (IP65) cannot be combined.

⑧ U-side end plate assembly no. (For L kit)

VVQ2000-2A-1-L-□

Enclosure

Nil	Dust-protected
W	Dust-tight, Water-jet-proof (IP65)

Note) Select it depending on the manifold type.

<Manifold Block Assembly>

⑨ Manifold block assembly no.

Tie-rod (2 pcs.) and lead wire assembly for extensions are attached.

VVQ2000-1A-□-□-□

Electrical entry

F0	Without lead wire
F1	F kit for 2 to 12 stations/Double wiring
F2	F kit for 13 to 24 stations/Double wiring
F3	F kit for 2 to 24 stations/Single wiring
P1	P/J/G/S kit for 2 to 12 stations/Double wiring
P2	P/J/G/S kit for 13 to 24 stations/Double wiring
P3	P/J/G/S kit for 2 to 24 stations/Single wiring
L0□	L0 kit □: Stations (1 to 8)
L1□	L1 kit □: Stations (1 to 8)
L2□	L2 kit □: Stations (1 to 8)
T1	T kit for 2 to 20 stations/Double wiring
T3	T kit for 2 to 20 stations/Single wiring
M1	M kit for 2 to 12 stations/Double wiring
M2	M kit for 13 to 24 stations/Double wiring
M3	M kit for 2 to 24 stations/Single wiring

Port size

C4	With ø4 One-touch fitting
C6	With ø6 One-touch fitting
C8	With ø8 One-touch fitting
C0	Without One-touch fitting (With clip)

Enclosure

Nil	Dust-protected
W	Dust-tight, Water-jet-proof (IP65)

Note) F/P/J/G kit are available with "Nil" only.
M kit is available with [W] only.
S/L/T kit are selectable depending on the manifold type.

<Fitting Assembly>

⑭ Fitting assembly part no. (For cylinder port)

VVQ1000-51A-□

Port size

C4	Applicable tubing ø4
C6	Applicable tubing ø6
C8	Applicable tubing ø8

Note) Purchase orders are available in units of 10 pieces.

⑮ Fitting assembly part no. (For 1(P), 3(R) port)

VVQ2000-51A-C10

Applicable tubing ø10

Note) Purchase orders are available in units of 10 pieces.

⑯ Tie-rod assembly part no. (2 pcs./set)

VVQ2000-TR-□

Note 1) Please order when eliminating manifold stations.
When adding stations, tie-rods are attached to the manifold block assembly. Therefore, it is not necessary to order.
Note 2) □: Stations 02 to 24
Note 3) For S/P/J/F/L kit

<Replacement Parts for Manifold Block>

Replacement Parts

No.	Part no.	Description	Material	Quantity
⑩	**VVQ2000-80A-1**	Gasket	HNBR	12
⑪	**VVQ2000-80A-2**	Seal	HNBR	12
⑫	**VVQ2000-80A-3**	Clamp screw	Carbon steel	12
⑬	**VVQ2000-80A-4**	Clip	Stainless steel	12

Note) A set of parts containing 12 pcs. each is enclosed.

10-21-VQ1000: Manifold Optional Parts

Blanking plate assembly
VVQ1000-10A-1

Symbol

It is used by attaching on the manifold block for being prepared for removing a valve for maintenance reasons or planning to mount a spare valve, etc.

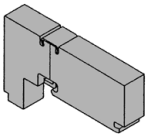

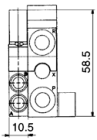

Individual SUP spacer
VVQ1000-P-1-$^{C6}_{N7}$

When the same manifold is to be used for different pressures, individual SUP spacers are used as SUP ports for different pressures. (One station space is occupied.) Block both sides of the station, for which the supply pressure from the individual SUP spacer is used, with SUP block plates. (Refer to the application example.)

- Specify the spacer mounting position and SUP block plate position by means of the manifold specification sheet. The block plate is used in one or two places for one set. (Two SUP block plates for blocking SUP station are attached to the individual SUP spacer.)
- As a standard, electric wiring is connected to the position of the manifold station where the individual SUP spacer is mounted.
- If wiring is not required for stations equipped with spacers, enter "X" in the special wiring specifications column in the manifold specification sheet.

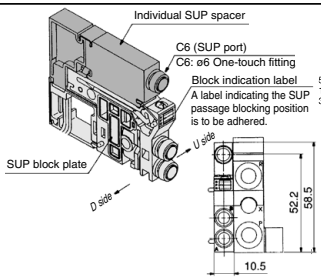

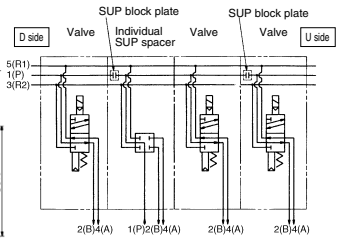

Individual EXH spacer
VVQ1000-R-1-$^{C6}_{N7}$

When valve exhaust affects other stations due to the circuit configuration, this spacer is used for individual valve exhaust. (One station space is occupied.)
Block both sides of the individual valve EXH station. (Refer to the application example.)

- Specify the mounting position, as well as the EXH block base or EXH block plate position by means of the manifold specification sheet. The block plate is used in one or two places for one set.
- An EXH block base assembly is used in the blocking position when ordering an EXH spacer incorporated with a manifold no. However, do not order an EXH block base assembly because it is attached to the spacer.
  When separately ordering an individual EXH spacer, separately order an EXH block base assembly because it is not attached to the spacer.
- As a standard, electric wiring is connected to the position of the manifold station where the individual EXH spacer is mounted.
- If wiring is not required for stations equipped with spacers, enter "X" in the special wiring specifications column in the manifold specification sheet.

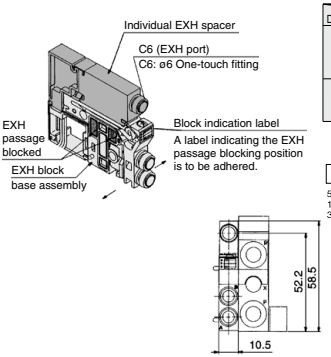

Description/Model	Stations	1	2	3	4	5	6	7
Valve	Single	●		●	●			
	⋮							
Option	Individual EXH spacer VVQ1000-R-1-C6		●					
	EXH blocking position: Specify 2 places.	●		●				

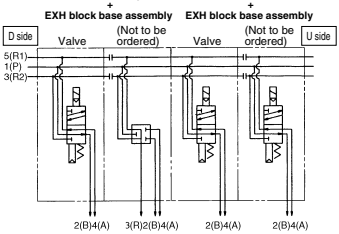

SUP block plate
VVQ1000-16A

When different pressures are supplied to a manifold, a SUP block plate is used to block the stations under different pressures.

- Specify the mounting position by means of the manifold specification sheet.

<Block indication label>
Indication labels to confirm the blocking position are attached (Each for SUP passage and SUP/EXH passage blocking positions).

- When ordering a block plate incorporated with a manifold, a block indication label is attached to the manifold.

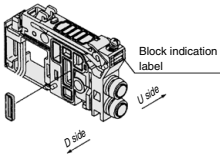

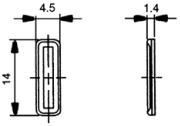

SUP passage blocked

SUP/EXH passage blocked

EXH block base assembly
VVQ1000-19A-F/L-(C3/C4/C6/M5/N1/N3/N7)

Manifold block assembly
Electrical entry

F0	Without lead wire
F1	For F kit (2 to 12 stations)/Double wiring
F2	For F kit (13 to 24 stations)/Double wiring
F3	For F kit (2 to 24 stations)/Single wiring
P1	For P, G, T, S kit (2 to 12 stations)/Double wiring
P2	For P, G, T, S kit (13 to 24 stations)/Double wiring
P3	For P, G, T, S kit (2 to 24 stations)/Single wiring
L0∗	L0 kit ∗ 1 to 8 stations
L1∗	L1 kit
L2∗	L2 kit

The manifold block assembly is used between stations for which exhaust is desired to be divided when valve exhaust affects other stations due to the circuit configuration. The EXH passage on the D-side is blocked in the EXH block base assembly. It is also used in combination with an individual EXH spacer for individual exhaust.

<Block indication label>
Indication labels to confirm the blocking position are attached. (Each for EXH passage and SUP/EXH passage blocking positions)
∗ When ordering a EXH block base incorporated with a manifold, a block indication label is attached to the manifold.

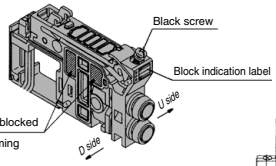

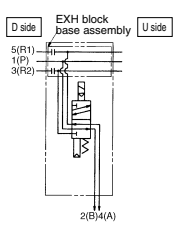

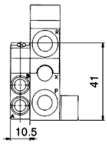

∗ Specify the mounting station by means of the manifold specification sheet.
∗ When ordering this option incorporated with a manifold, specify the EXH block base assembly part number with "∗" in front of it beneath the manifold part number.

EXH passage blocked

SUP/EXH passage blocked

Back pressure check valve assembly [-B]
VVQ1000-18A

It prevents cylinder malfunction caused by other valve exhaust entry. Insert it into R (EXH) port on the manifold side of a valve which is affected. It is effective when a single-acting cylinder is used or an exhaust center type solenoid valve is used.
∗ When ordering it being mounted on all manifold stations, suffix "-B" to the end of the manifold part number.
Note) When a back pressure check valve is desired, and is to be installed only in certain manifold stations, clearly indicate the part number and specify the mounting station by means of the manifold specification sheet.

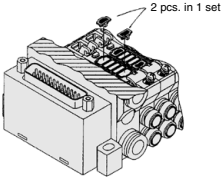

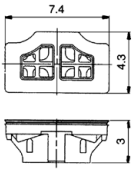

(Precautions)
1. The back pressure check valve assembly is the parts with a check valve structure. However, since the valve has slight air leakage, take precautions for the exhaust air not to be restricted at the exhaust port.
2. When a back pressure check valve is mounted, the effective area of the valve will decrease by about 20%.

Name plate [-N]
VVQ1000-N/NC-N-Station (1 to Max. stations)

N: Standard
NC: For mounting blanking plate with connector

It is a transparent resin plate for placing a label that indicates solenoid valve function, etc.
Insert it into the groove on the side of the end plate and bend it as shown in the figure.
∗ When the blanking plate with connector is mounted, it automatically will be "VVQ1000-NC-n"
∗ When ordering this option incorporated with a manifold, suffix "-N" to the end of the manifold part number.

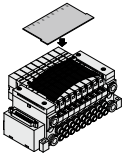

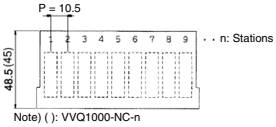

Note) ( ): VVQ1000-NC-n

Blanking plug (For One-touch fittings)
KQ2P-□

It is inserted into an unused cylinder port and SUP/EXH ports.
Purchase orders are available in units of 10 pieces.

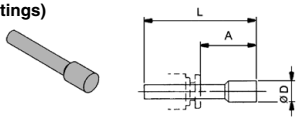

Dimensions

Applicable fitting size ød	Model	A	L	D	Applicable fitting size ød	Model	A	L	D
3.2	**KQ2P-23**	16	31.5	3.2	1/8"	**KQ2P-01**	16	31.5	5
4	**KQ2P-04**	16	32	6	5/32"	**KQ2P-03**	16	32	6
6	**KQ2P-06**	18	35	8	1/4"	**KQ2P-07**	18	35	8.5
8	**KQ2P-08**	20.5	39	10	5/16"	**KQ2P-09**	20.5	39	10

Port plug
VVQ0000-58A

The plug is used to block the cylinder port.
∗ When ordering this option incorporated with a manifold, indicate "CM" for the port size of the manifold part number, as well as, the mounting station and cylinder port mounting positions 4(A) and 2(B) by means of the manifold specification sheet.
∗ Gently screw an M3 screw in the port plug hole and pull it for removal.

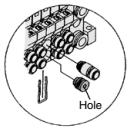

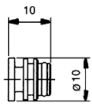

DIN rail mounting bracket [-D,-D0,-D□]
VVQ1000-57A

This bracket is used for mounting the manifold on the DIN rail.
∗ When ordering this option incorporated with a manifold, suffix "-D" to the end of the manifold part number.

1 set of DIN rail mounting brackets for 1 manifold includes 2 brackets.

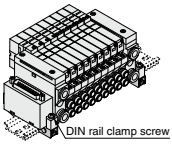

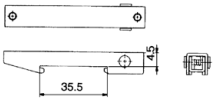

Mounting screws included

10-21-VQ2000: Manifold Optional Parts

Blanking plate assembly
VVQ2000-10A-1

Symbol

It is used by attaching on the manifold block for being prepared for removing a valve for maintenance reasons or planning to mount a spare valve, etc.

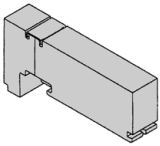

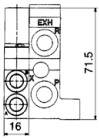

Individual SUP spacer
VVQ2000-P-1-$^{C8}_{N9}$

When the same manifold is to be used for different pressures, individual SUP spacers are used as SUP ports for different pressures. (One station space is occupied.)
Block both sides of the station, for which the supply pressure from the individual SUP spacer is used, with SUP block plates. (Refer to the application example.)

- Specify the spacer mounting position and SUP block plate position by means of the manifold specification sheet. The block plate is used in one or two places for one set. (Two SUP block plates for blocking SUP station are attached to the individual SUP spacer.)
- As a standard, electric wiring is connected to the position of the manifold station where the individual SUP spacer is mounted.
- If wiring is not required for stations equipped with spacers, enter "X" in the special wiring specifications column in the manifold specification sheet.

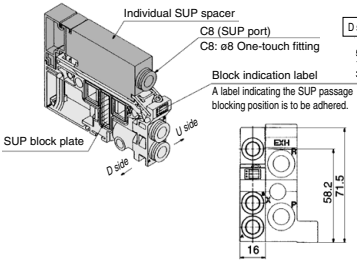

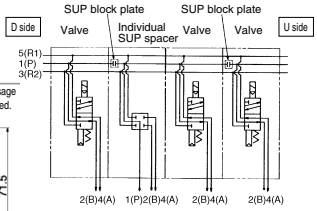

Individual EXH spacer
VVQ2000-R-1-$^{C8}_{N9}$

When valve exhaust affects other stations due to the circuit configuration, this spacer is used for individual valve exhaust. (One station space is occupied.)
Block both sides of the individual valve EXH station. (Refer to the application example.)

- Specify the mounting position, as well as the EXH block base or EXH block plate position by means of the manifold specification sheet.
  The block plate is used in one or two places for one set. (Two EXH block plates for blocking EXH station are attached to the individual EXH spacer.)
- As a standard, electric wiring is connected to the position of the manifold station where the individual EXH spacer is mounted.
- If wiring is not required for stations equipped with spacers, enter "X" in the special wiring specifications column in the manifold specification sheet.

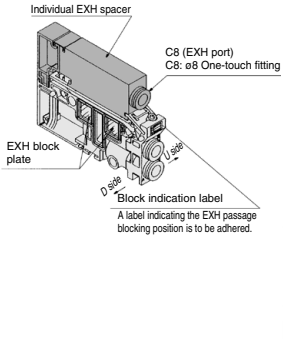

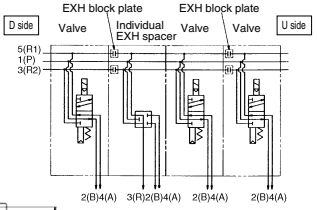

SUP block plate
VVQ2000-16A

When different pressures are supplied to a manifold, a SUP block plate is used to block the stations under different pressures.

- Specify the mounting position by means of the manifold specification sheet.

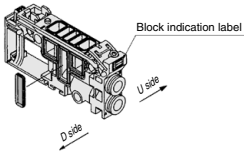

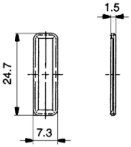

<Block indication label>

Indication labels to confirm the blocking position are attached. (Each for SUP passage and SUP/EXH passage blocking positions)

SUP passage blocked

SUP/EXH passage blocked

- When ordering a block plate incorporated with a manifold, a block indication label is attached to the manifold.

EXH block plate
VVQ2000-19A

The EXH block plate is used between stations for which exhaust is desired to be divided when valve exhaust affects other stations configuration. It is also used in combination with an individual EXH spacer for individual exhaust.

- Specify the mounting position by means of the manifold specification sheet.

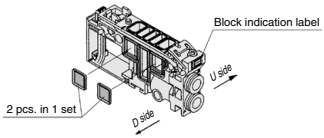

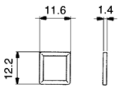

<Block indication label>

Indication labels to confirm the blocking position are attached. (Each for EXH passage and SUP/EXH passage blocking positions)

EXH passage blocked

SUP/EXH passage blocked

- When ordering a block plate incorporated with a manifold, a block indication label is attached to the manifold.

Back pressure check valve assembly [-B]
VVQ2000-18A

It prevents cylinder malfunction caused by other valve exhaust entry. Insert it into R (EXH) port on the manifold side of a valve which is affected. It is effective when a single-acting cylinder is used or an exhaust center type solenoid valve is used.

* When ordering assemblies incorporated with a manifold, add suffix "-B" to the end of the manifold part number.

Note) When a check valve for back pressure prevention is desired and is to be installed only in certain manifold stations, clearly indicate the part number and specify the mounting position by means of the manifold specification sheet.

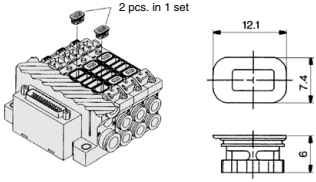

(Precautions)

1. The back pressure check valve assembly is assembly parts with a check valve structure. However, since the valve has slight air leakage, take precautions for the exhaust air not to be restricted at the exhaust port.
2. When a back pressure check valve is mounted, the effective area of the valve will decrease by about 20%.

Name plate [-N]
VVQ2000-N-Station (1 to Max. stations)

It is a transparent resin plate for placing a label that indicates solenoid valve function, etc.
Insert it into the groove on the side of the end plate and bend it as shown in the figure.

* When ordering this option incorporated with a manifold, suffix "-N" to the end of the manifold part number.

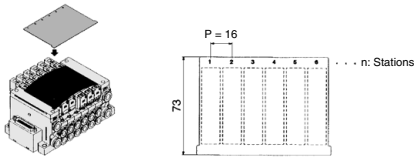

Blanking plug (For One-touch fittings)
KQ2P-□

It is inserted into an unused cylinder port and SUP/EXH ports. Purchase orders are available in units of 10 pieces.

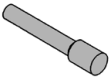

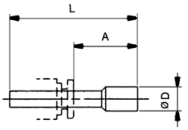

Dimensions

Applicable fitting size ød	Model	A	L	D	Applicable fitting size ød	Model	A	L	D
4	**KQ2P-04**	16	32	6	5/32"	**KQ2P-03**	16	32	6
6	**KQ2P-06**	18	35	8	1/4"	**KQ2P-07**	18	35	8.5
8	**KQ2P-08**	20.5	39	10	5/16"	**KQ2P-09**	20.5	39	10
10	**KQ2P-10**	22	43	12	3/8"	**KQ2P-11**	22	43	11.5

DIN rail mounting bracket [-D,-D0,-D□]
VVQ2000-57A

This bracket is used for mounting the manifold on the DIN rail.

* When ordering this option incorporated with a manifold, suffix "-D" to the end of the manifold part number.

1 set of DIN rail mounting brackets for 1 manifold includes 2 brackets.

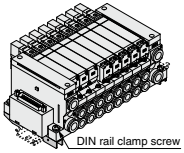

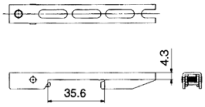

Specific Product Precautions 1

Be sure to read this before handling.
Refer to page 1382 for Safety Instructions and pages 677 to 683 for 3/4/5 Port Solenoid Valve Precautions.

Light/Surge Voltage Suppressor

⚠Caution

The lighting positions are concentrated on one side for both single solenoid type and double solenoid type. In the double solenoid type, A side and B side energization are indicated by two colors which match the colors of the manual overrides.

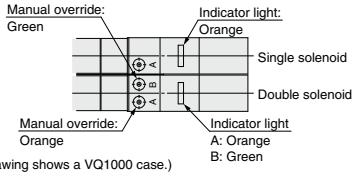

(Drawing shows a VQ1000 case.)

DC circuit diagram

Single solenoid

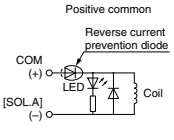

Double solenoid

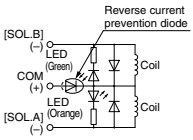

Note) A-side energization: A light (Orange) illuminates.
B-side energization: B light (Green) illuminates.

With wrong wiring prevention (stop diode) mechanism

With a surge absorption (surge absorption diode) mechanism

Manual Override

⚠Warning

Without an electric signal for the solenoid valve the manual override is used for switching the main valve. Push type is standard. (Tool required) Locking type is semi-standard. (Tool required/Manual)

■ Push type (Tool required)

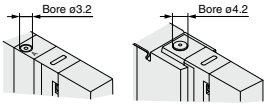

10-21-VQ1000 10-21-VQ2000

Push down on the manual override with a small screwdriver, etc. until it stops. Release the screwdriver and the manual override will return.

■ Locking type (Tool required) <Semi-standard>

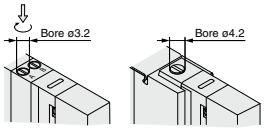

10-21-VQ1000 10-21-VQ2000

Push down on the manual override with a flat head screwdriver until it stops. Turn it clockwise by 90° to lock it. Turn it counterclockwise to release it.

■ Locking type (Manual) <Semi-standard>

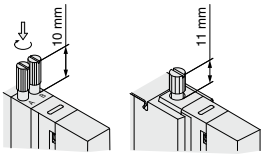

10-21-VQ1000 10-21-VQ2000

Push down on the manual override with a small flat head screwdriver or with your fingers until it stops. Turn it clockwise by 90° to lock it. Turn it counterclockwise to release it.

⚠Caution
Do not apply excessive torque when turning the locking type manual override. (0.1 N·m or less)

Specific Product Precautions 2

Be sure to read this before handling.
Refer to page 1382 for Safety Instructions and pages 677 to 683 for 3/4/5 Port Solenoid Valve Precautions.

Manual Override

⚠Warning

■ **Slide locking type (Manual) <Semi-standard>**

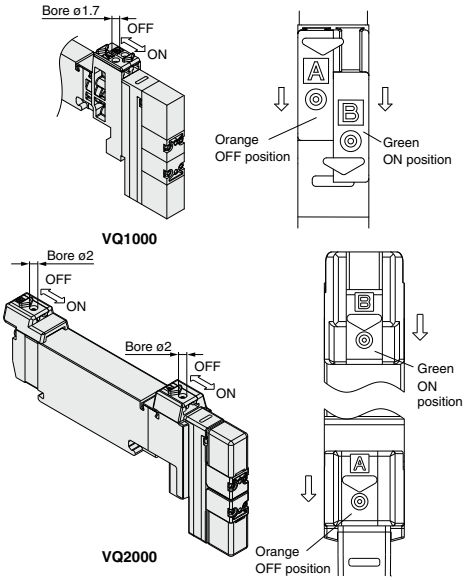

The manual override is locked by sliding it all the way to the pilot valve side (ON side) with a small flat head screwdriver or finger. Slide it to the fitting side (OFF side) to release it. In addition, it can also be used as a push type by using a screwdriver, etc., of ø1.7 or less. (ø2 or less for VQ2000).

How to Mount/Remove Solenoid Valves

⚠Caution

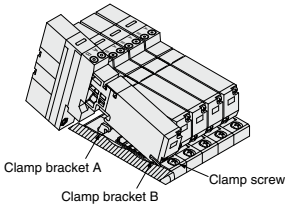

Removing

1. Loosen the clamp screw until it turns freely. (The screw is captive.)
2. Lift the coil side of the valve body while pressing down slightly on the screw head and remove it from the clamp bracket B. When the screw head cannot be pressed easily, gently press the area near the manual override of the valve.

How to Mount/Remove Solenoid Valves

⚠Caution

Mounting

1. Press down on the clamp screw. Clamp bracket A opens. Diagonally insert the hook on the valve end plate side into clamp B.
2. Press the valve body downward. (When the screw is released, it will be locked by clamp bracket A.)
3. Tighten the clamp screw. (Proper tightening torque: VQ1000, 0.25 to 0.35 N·m; VQ2000, 0.5 to 0.7 N·m.)

⚠Caution

Dust on the sealing surface of the gasket or solenoid valve can cause air leakage.

Replacement of Cylinder Port Fittings

⚠Caution

The cylinder port fittings are a cassette for easy replacement. The fittings are blocked by a clip. Take out the clip with a flat head screwdriver, etc., then replace the fittings.
For mounting, insert the fitting assembly until it strikes against the inside wall and then insert the clip to the specified position.

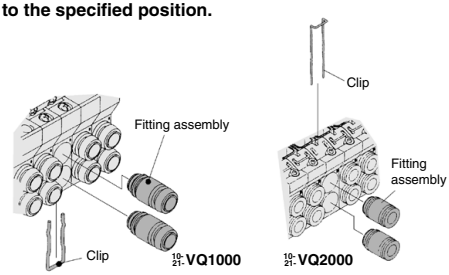

Applicable tubing O.D.	Fitting assembly part no.	
	10-21-VQ1000	10-21-VQ2000
Applicable tubing ø3.2	VVQ1000-50A-C3	—
Applicable tubing ø4	VVQ1000-50A-C4	VVQ1000-51A-C4
Applicable tubing ø6	VVQ1000-50A-C6	VVQ1000-51A-C6
Applicable tubing ø8	—	VVQ1000-51A-C8
M5	VVQ1000-50A-M5	—
Applicable tubing ø1/8"	VVQ1000-50A-N1	—
Applicable tubing ø5/32"	VVQ1000-50A-N3	VVQ1000-51A-N3
Applicable tubing ø1/4"	VVQ1000-50A-N7	VVQ1000-51A-N7
Applicable tubing ø5/16"	—	VVQ1000-51A-N9

∗ Refer to "Manifold Optional Parts" on pages 572 for other types of fittings.

⚠Caution

1. Use caution that O-rings must be free from scratches and dust. Otherwise, air leakage may result.
2. After screwing in the fittings, mount the M5 fitting assembly on the manifold base. (Tightening torque: 0.8 to 1.2 N·m)
3. Purchase orders are available in units of 10 pieces.

Specific Product Precautions 3

Be sure to read this before handling.
Refer to page 1382 for Safety Instructions and pages 677 to 683 for 3/4/5 Port Solenoid Valve Precautions.

How to Mount/Remove DIN Rail

⚠Caution

Removing

1. Loosen the clamp screw on side (a) of the end plate on both sides.
2. Lift side (a) of the manifold base and slide the end plate in the direction of (2) shown in the figure to remove.

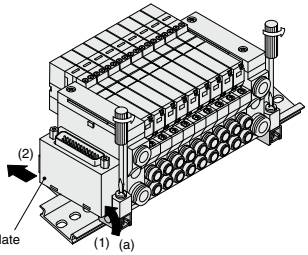

Mounting

1. Hook side (b) of the manifold base on the DIN rail.
2. Press down side (a) and mount the end plate on the DIN rail. Tighten the clamp screw on side (a) of the end plate. The proper tightening torque for screws is 0.4 to 0.6 N·m.

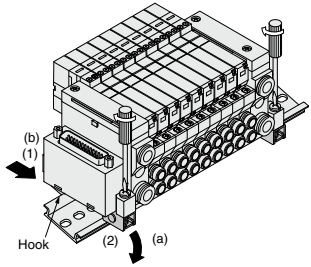

IP65 Enclosure

⚠Caution

Wiring connection for models conforming to IP65 should also have enclosures equivalent to or of stricter than IP65.

How to Calculate Flow Rate

Refer to the **WEB catalog** for obtaining the flow rate.