No.PS※※-OMW0009-A

Operation Manual

PRODUCT NAME

Digital Gap Checker
(IO-Link compatible)

MODEL / Series / Product Number

ISA3 series

SMC Corporation

Table of Contents

Safety Instructions

These safety instructions are intended to prevent hazardous situations and/or equipment damage.
These instructions indicate the level of potential hazard with the labels of "Caution", "Warning" or "Danger".
They are all important notes for safety and must be followed in addition to International Standards (ISO/IEC)*1), and other safety regulations.

*1) ISO 4414: Pneumatic fluid power -- General rules relating to systems.
ISO 4413: Hydraulic fluid power -- General rules relating to systems.
IEC 60204-1: Safety of machinery -- Electrical equipment of machines .(Part 1: General requirements)
ISO 10218: Manipulating industrial robots -Safety.
etc.

⚠ **Caution**	**Caution** indicates a hazard with a low level of risk which, if not avoided, could result in minor or moderate injury.
⚠ **Warning**	**Warning** indicates a hazard with a medium level of risk which, if not avoided, could result in death or serious injury.
⚠ **Danger**	**Danger** indicates a hazard with a high level of risk which, if not avoided, will result in death or serious injury.

⚠ Warning

1. The compatibility of the product is the responsibility of the person who designs the equipment or decides its specifications.
Since the product specified here is used under various operating conditions, its compatibility with specific equipment must be decided by the person who designs the equipment or decides its specifications based on necessary analysis and test results.
The expected performance and safety assurance of the equipment will be the responsibility of the person who has determined its compatibility with the product.
This person should also continuously review all specifications of the product referring to its latest catalog information, with a view to giving due consideration to any possibility of equipment failure when configuring the equipment.

2. Only personnel with appropriate training should operate machinery and equipment.
The product specified here may become unsafe if handled incorrectly.
The assembly, operation and maintenance of machines or equipment including our products must be performed by an operator who is appropriately trained and experienced.

3. Do not service or attempt to remove product and machinery/equipment until safety is confirmed.
1. The inspection and maintenance of machinery/equipment should only be performed after measures to prevent falling or runaway of the driven objects have been confirmed.
2. When the product is to be removed, confirm that the safety measures as mentioned above are implemented and the power from any appropriate source is cut, and read and understand the specific product precautions of all relevant products carefully.
3. Before machinery/equipment is restarted, take measures to prevent unexpected operation and malfunction.

4. Contact SMC beforehand and take special consideration of safety measures if the product is to be used in any of the following conditions.
1. Conditions and environments outside of the given specifications, or use outdoors or in a place exposed to direct sunlight.
2. Installation on equipment in conjunction with atomic energy, railways, air navigation, space, shipping, vehicles, military, medical treatment, combustion and recreation, or equipment in contact with food and beverages, emergency stop circuits, clutch and brake circuits in press applications, safety equipment or other applications unsuitable for the standard specifications described in the product catalog.
3. An application which could have negative effects on people, property, or animals requiring special safety analysis.
4. Use in an interlock circuit, which requires the provision of double interlock for possible failure by using a mechanical protective function, and periodical checks to confirm proper operation.

Safety Instructions

⚠Caution

1.The product is provided for use in manufacturing industries.
The product herein described is basically provided for peaceful use in manufacturing industries.
If considering using the product in other industries, consult SMC beforehand and exchange specifications or a contract if necessary.
If anything is unclear, contact your nearest sales branch.

Limited warranty and Disclaimer/Compliance Requirements

The product used is subject to the following "Limited warranty and Disclaimer" and "Compliance Requirements".
Read and accept them before using the product.

Limited warranty and Disclaimer

1. The warranty period of the product is 1 year in service or 1.5 years after the product is delivered,whichever is first.∗2)
Also, the product may have specified durability, running distance or replacement parts. Please consult your nearest sales branch.
2. For any failure or damage reported within the warranty period which is clearly our responsibility, a replacement product or necessary parts will be provided.
This limited warranty applies only to our product independently, and not to any other damage incurred due to the failure of the product.
3. Prior to using SMC products, please read and understand the warranty terms and disclaimers noted in the specified catalog for the particular products.

∗2) Vacuum pads are excluded from this 1 year warranty.
A vacuum pad is a consumable part, so it is warranted for a year after it is delivered. Also, even within the warranty period, the wear of a product due to the use of the vacuum pad or failure due to the deterioration of rubber material are not covered by the limited warranty.

Compliance Requirements

1. The use of SMC products with production equipment for the manufacture of weapons of mass destruction (WMD) or any other weapon is strictly prohibited.
2. The exports of SMC products or technology from one country to another are governed by the relevant security laws and regulation of the countries involved in the transaction. Prior to the shipment of a SMC product to another country, assure that all local rules governing that export are known and followed.

⚠Caution

SMC products are not intended for use as instruments for legal metrology.
Products that SMC manufactures or sells are not measurement instruments that are qualified by pattern approval tests relating to the measurement laws of each country.
Therefore, SMC products cannot be used for business or certification ordained by the measurement laws of each country.

■Important

In order to use this product safely, be sure to read and follow the instructions given in "Pressure switches/Flow switches common precautions" which can be found under "Handling Precautions for SMC Products" on the SMC website, before use.

■Operator

- ♦This operation manual is intended for those who have knowledge of machinery using pneumatic equipment, and have sufficient knowledge of assembly, operation and maintenance of such equipment. Only those persons are allowed to perform assembly, operation and maintenance.
- ♦Read and understand this operation manual carefully before assembling, operating or providing maintenance to the product.

■Specific product precautions

⚠Warning

About this product

- **This product is not designed to be explosion proof.**
- **Do not use a fluid containing chemicals, synthetic oils including organic solvent, salt and corrosive gases.**
  Otherwise damage to the product, malfunction and failure can result.
- **Writing time of input data to product is 1000000 times.**

Design

- **The product should be positioned higher than the detection nozzle.**
  If the product is positioned lower than the detection nozzle, water or oil may enter the detection port, causing a malfunction or operational failure.

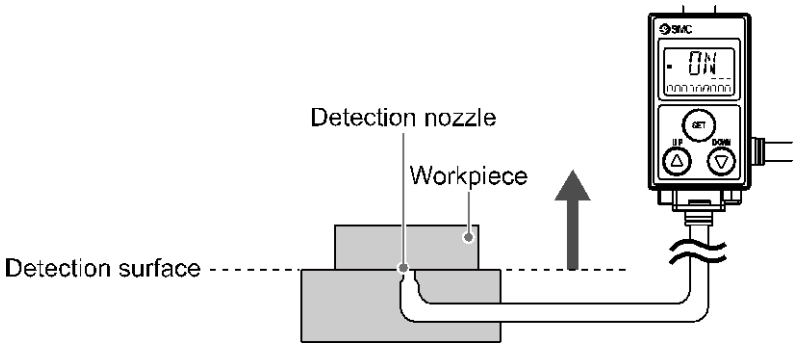

- **Do not use multiple detection nozzles with one product.**
  Correct measurement may not be possible. If multiple nozzles are to be used, please test them on the actual equipment. It is necessary for the user to verify correct operation.

⚠Warning

Mounting/Installation

- **If the entering of foreign material to the fluid is possible, install the filter (5 μm or less) or the mist separator to the upstream side.**
- **If compressed air containing condensate is used, install the air dryer or the drain catch before the filter, and perform drainage regularly.**
  If regular drainage is difficult, the use of a filter with an auto drain is recommended.

Piping

- **Eliminate any dust left in the piping by air blow before connecting the piping to the product.**
  Otherwise it can cause damage to the product, malfunction or failure.
- **Perform function and leakage inspection after piping.**
  Safety cannot be assured in the case of unexpected malfunction. Disconnect the power supply and stop the fluid supply if the equipment does not function properly or if there is leakage of fluid.
- **Do not use equipment or fittings that may leak or obstruct the air flow between the product and the detection nozzle.**

Wiring

- **The product is CE marked, but not immune to lightning strikes. Take measures against lightning strikes in the system.**
- **Limit of the cable tensile force is 50 N.**
  Do not lift or carry the product by holding the cables.
- **If the lead wire can move, fix it near the body of the product.**
- **Keep wiring as short as possible to prevent interference from electromagnetic noise and surge voltage.**
  Do not use a cable longer than 20 m.
  Wire the DC (-) line (blue) as close as possible to the power supply.

Operating environment

- **Do not use the product in an environment where the product is constantly exposed to water or oil splashes.**
  Otherwise it can cause failure or malfunction. Take measures such as using a cover.
- **Do not use in an atmosphere containing oil, corrosive gases, chemicals, sea water, or where there is direct contact with any of these.**
  Even exposure for a short period of time, will have adverse effects including damage, failure, malfunction and hardening of the cable.
- **Do not use the product in the presence of a magnetic field.**
  Otherwise malfunction can result.
- **Do not operate close to a heat source, or in a location exposed to radiant heat.**
  Otherwise malfunction can result.
- **When the product is contained in a box for use, provide an exhaust port for constant release of pressure to atmosphere.**
  If the pressure in the box is not atmospheric pressure, correct inspection will not be available and malfunction may result.
- **The enclosure of the switch conforms to IP67 and that for the solenoid valve to IP65. The pressure gauge and the regulator have open constructions. Take proper protection measures in an environment where water splashes, oil or spatters from welding may adhere to the product.**

⚠Warning

Usage

- **Do not short-circuit the load.**
  When the load is short circuit, generated excess current lead to cause the damage of the product.
- **Do not press the setting buttons with a sharp pointed object.**
  It may damage the setting buttons.
- **During the any setting, the product will switch the output according to the existing settings until the changes are complete.**
  Confirm the output has no adverse effect on machinery and equipment before setting.
  Stop the control system before setting if necessary.
- **Perform settings suitable for the operating conditions.**
  Incorrect setting can cause operation failure.
  For details of each setting, refer to each “Setting” page 44 of this manual.
- **Do not touch the LCD during operation.**
  The display can vary due to static electricity.

Maintenance Service

- **Drain system regularly.**
  If condensate enters the secondary side, it may cause malfunction of pneumatic equipment.

◆Please read and understand the cautions in the Operation Manuals for VX2 series (2 port solenoid valve) and AR20 series (Regulator) before use.

Features

The Gap between the detection surface and the workpiece (0.01 mm to 0.03 mm, 0.02 mm to 0.15 mm, 0.05 mm to 0.30 mm) can be detected.
The Gap condition is indicated on the main display in Green (ON) or Orange (OFF). ∗: Default setting.
The sub display indicates the distance between the detection surface and the workpiece using a level meter.
This product is a non-contact switch which will not scratch the workpiece.

(A) The Workpiece is not seated in the correct position due to a foreign object.

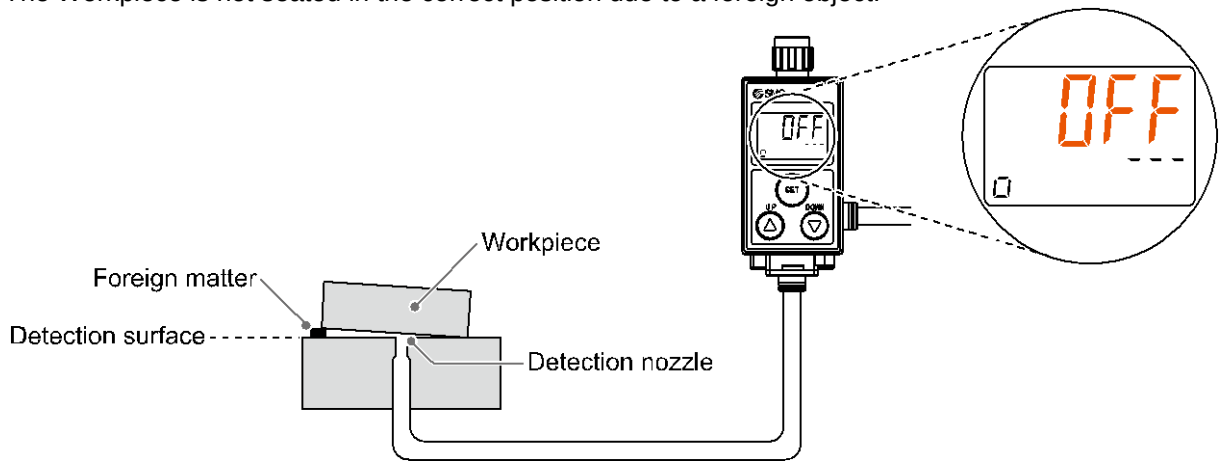

(B) Within the acceptable range (Seats correctly).

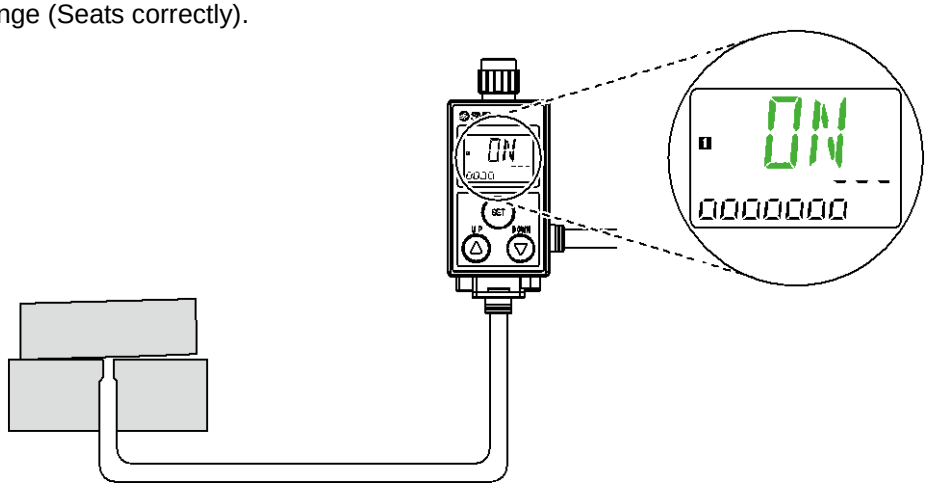

(C) The Workpiece is more closely in contact than in (B).

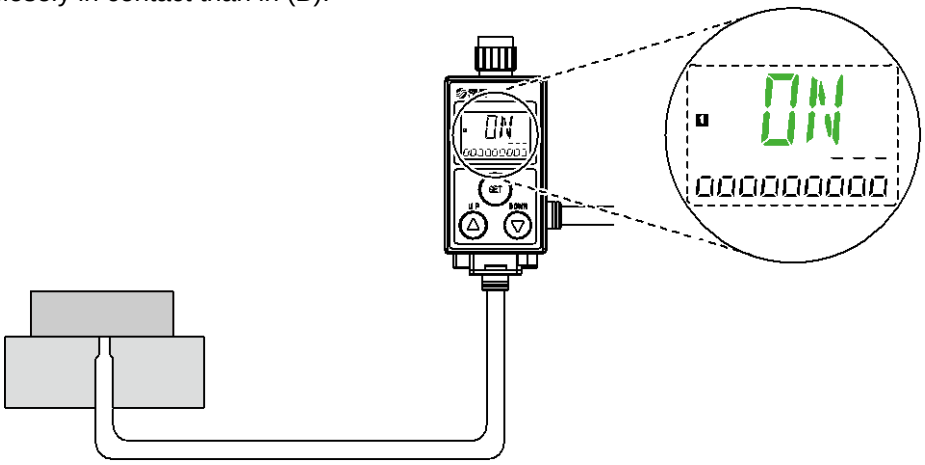

Model Indication and How to Order

○**Without control unit**

ISA3 - G C L - M 1 □ □

Rated distance range

F	0.01 to 0.03 mm
G	0.02 to 0.15 mm
H	0.05 to 0.30 mm

Piping specifications

C	Supply side: Rc1/8 Detection side: ϕ4 One-touch fitting *1 ϕ6 One-touch fitting *2
F	Supply side: G1/8 *3 Detection side: G1/8 *3

Output specifications

L	IO-Link/Switch output 1 + Switch output 2 (Switch output can be selected, NPN or PNP)

OUT1: Gap size detection
OUT2: Gap size, outlet pressure, supply pressure detection
(Select from the above.)

Unit specifications

Nil	With units selection function *4
M	Fixed SI unit *5

Number of stations

1	1 Station
2	2 Stations
3	3 Stations
4	4 Stations
5	5 Stations
6	6 Stations

Option 2 (Bracket)

Nil	None (DIN rail mounting) *9
B	With bracket *7 *10 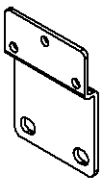

Option 1 (Cable)

Nil	Straight *7 
L	Right angle *7 
N	None
S	Centralized lead wire (Lead wire only) *6 *7 *8 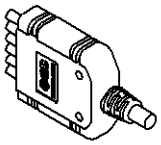
T	Centralized lead wire (With bracket) *6 *7 *8 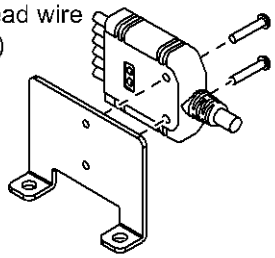

*1: To be used for the rated distance range of "F".
*2: To be used for the rated distance range of "G" or "H".
*3: ISO1179-1
*4: The new Measurement Law prohibits the use of pressure switch with the units selection function in Japan.
*5: Fixed unit: kPa
*6: Cannot be selected for 1 station.
*7: At the factory, the options are not attached to the product, but packed together with it for shipment.
*8: Refer to *8 (page 10).
*9: DIN rail must be ordered separately.
*10: About the number of brackets.
1 station: 1 piece is packed
More than 2 stations: 2 pieces is packed

○**With control unit**

ISA3 - G C L - M 2 □ B - L 1 □

Rated distance range

F	0.01 to 0.03 mm
G	0.02 to 0.15 mm
H	0.05 to 0.30 mm

Piping specifications

C	Supply side: Rc1/8 Detection side: ϕ4 One-touch fitting *1 ϕ6 One-touch fitting *2
F	Supply side: G1/8 *3 Detection side: G1/8 *3

Control unit piping *11

Gap checker piping	Supply port piping
C	Rc1/4
F	G1/4 *12

Output specifications

L	IO-Link/Switch output 1 + Switch output 2 (Switch output can be selected, NPN or PNP)

Output 1: Gap size detection
Output 2: Gap size, outlet pressure, supply pressure detection (Select from the above.)

Unit specifications

Nil	With units selection function *4
M	Fixed SI unit *5

Number of stations

1	1 Station
2	2 Stations
3	3 Stations
4	4 Stations
5	5 Stations
6	6 Stations

Option 1 (Cable)

Nil	Straight *7
L	Right angle *7
N	None
S	Centralized lead wire (Lead wire only) *6 *7 *8
T	Centralized lead wire (With bracket) *6 *7 *8

Rated voltage
2 port solenoid valve

Nil	24 VDC
1 *10	100 VAC
2 *10	110 VAC

Regulator

N *10		Without regulator
0	With regulator	Without pressure gauge
1	With regulator	Round pressure gauge MPa only, 0.4 MPa max.
2	With regulator	Square pressure gauge MPa only, 0.4 MPa max.
3	With regulator	Round pressure gauge MPa only, 0.2 MPa max.
4	With regulator	Square pressure gauge MPa only, 0.2 MPa max.
5	With regulator	Round pressure gauge MPa/psi, 0.4 MPa max.
6	With regulator	Square pressure gauge MPa/psi, 0.4 MPa max.
7	With regulator	Round pressure gauge MPa/psi, 0.2 MPa max.
8	With regulator	Square pressure gauge MPa/psi, 0.2 MPa max.

Control unit

L	With control unit (Supply port: Left side)
R	With control unit (Supply port: Right side)

Option 2 (Bracket)

B	With bracket *9

∗1: To be used for the rated distance range of "F".
∗2: To be used for the rated distance range of "G" or "H".
∗3: ISO1179-1
∗4: The new Measurement Law prohibits the use of pressure switch with the units selection function in Japan.
∗5: Fixed unit: kPa
∗6: Cannot be selected for 1 station.
∗7: At the factory, the options are not attached to the product, but packed together with it for shipment.
∗8: The electrical entry of centralized lead wire for M12 connector is on the right side.
If the supply port on the right side is used, arrange the centralized lead wire so that it does not interfere with the control unit.

Supply port: Left side

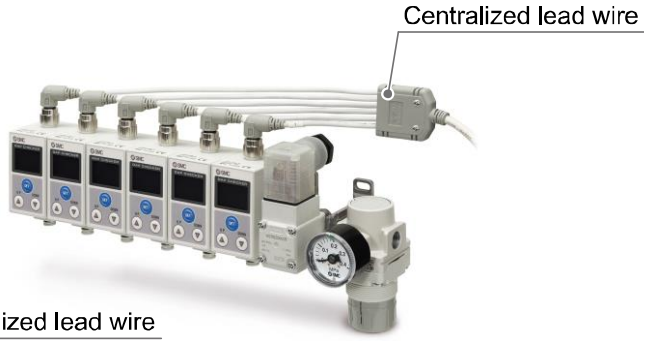

Supply port: Right side

∗9: The bracket for control unit will be assembled before shipment.
∗10: Made to order
∗11: When the control unit is mounted, the piping specifications of the supply port will be changed due to piping specification of the gap checker.
∗12: ISO16030

○Option/Part number

Joint screws
(2 screws, 2 spacers *, 2 nuts)

ISA-16-□

Number of stations	Part number
2	ISA-16-2
3	ISA-16-3
4 *	ISA-16-4
5	ISA-16-5
6 *	ISA-16-6

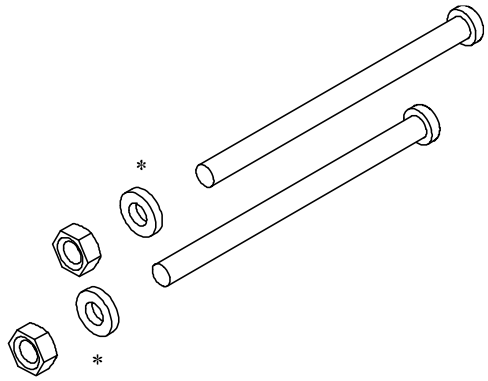

*: Spacers are included for 4 and 6 stations.

Bracket (when control unit not fitted)
(Nominal size:3 x 8, 3 screws)

ISA-14

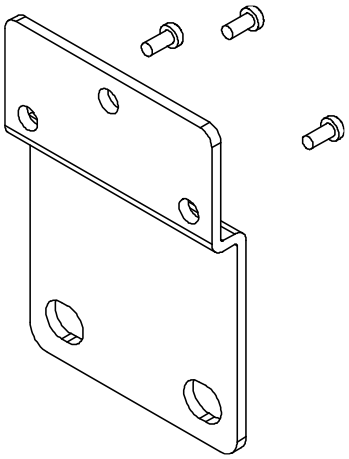

With connector cable

ZS-31-B

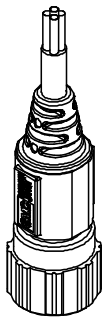

With connector cable

ZS-31-C

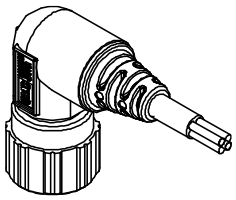

DIN rail

ISA-5-□

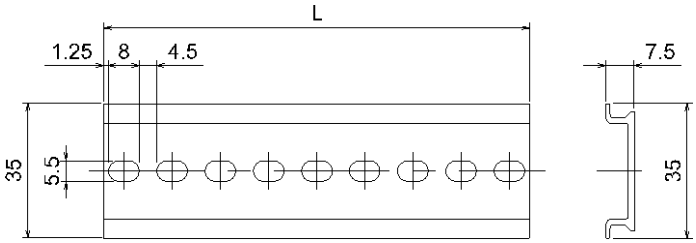

Part number	L	Number of stations
ISA-5-1	73.0	1
ISA-5-2	135.5	2
ISA-5-3	173.0	3
ISA-5-4	210.5	4
ISA-5-5	248.0	5
ISA-5-6	285.5	6

Threaded plug with seal

ISA-12-□

Piping type	Part number
Rc1/8	ISA-12-A
G1/8	ISA-12-C

Seal for extra station *

ISA-15

*: This is applicable in both piping specification C and F.

Centralized lead wire

ISA-21-□

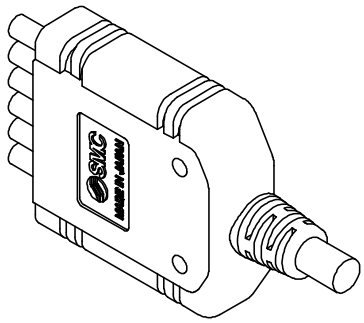

Stations	Model
2	ISA-21-2
3	ISA-21-3
4	ISA-21-4
5	ISA-21-5
6	ISA-21-6

Bracket for centralized lead wire

ISA-20

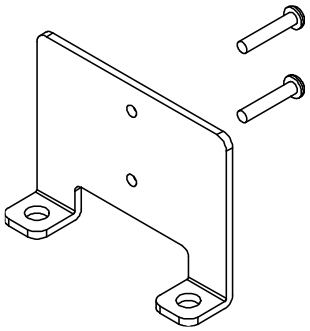

Regulator

AR20-□02□-1□-B□

AR20 - □ 02 □ - 1 □ - B □

Thread type

Nil	Rc
F	G

Semi-standard specification

Nil	N/A
R	Flow direction: right → left

Option (Pressure gauge type)

Maximum pressure display of the pressure gauge

Nil	Without pressure gauge	Nil	–
E	With square embedded gauge (with limit indicator)	Nil	Max. pressure display: 0.4 MPa
		-X2105	Max. pressure display: 0.2 MPa
		-X2176	Max. pressure display: 60 PSI (0.4 MPa)*2
		-X2175	Max. pressure display: 30 PSI (0.2 MPa)*2
G *1	With round pressure gauge (with limit indicator, display in MPa only)	Nil	Max. pressure display: 0.4 MPa
		-X2105	Max. pressure display: 0.2 MPa
P *1	With round pressure gauge (with limit indicator, display in MPa/psi)*2	Nil	Max. pressure display: 0.4 MPa
		-X2105	Max. pressure display: 0.2 MPa

*1: The mounting thread of the pressure gauge is Rc1/8. The pressure gauge is shipped together with the product, but not assembled.

*2: This product will not be sold for use in Japan.

2 port solenoid valve

VX210□□X276

VX210□□□X276

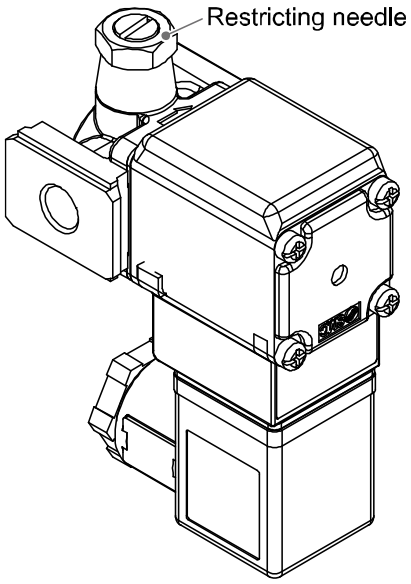

• Specifications

Symbol	Specification
X276	With restrictor

• Voltage and Electrical entry

Symbol	Voltage	Electrical entry
Z2A	24 VDC	With DIN terminal and light (with surge voltage suppressor)
Z2B *2	100 VAC	
Z2C *2	110 VAC	

*2: Made to order. When AC100 V and AC110 V are selected, the product without thread machining (symbol: Z) cannot be selected.

• Body material, Port size, Orifice size

Symbol	Body material	Port size	Orifice size
Z	Al	Without thread machining (1/8)	φ4
B *1		Rc1/4	
D *1		G1/4	

*1: Made to order

Bracket (when control unit fitted)
(Nominal size:3 x 8, 2 screws)

ISA-17

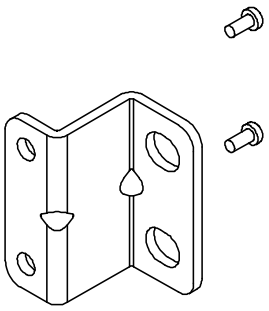

Spacer with bracket

Y200T-A

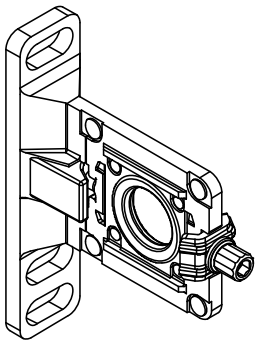

Modular adapter

E210-U01

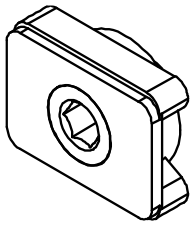

Spacer

ISA-18

With O-ring

*: When a 2 port solenoid valve is connected to the right.

Summary of Product parts

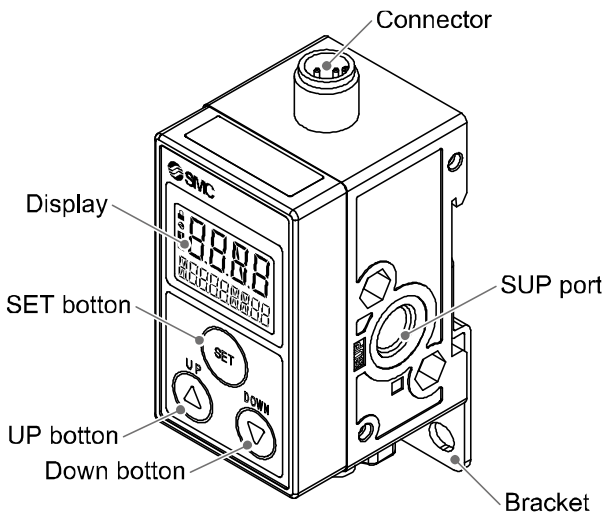

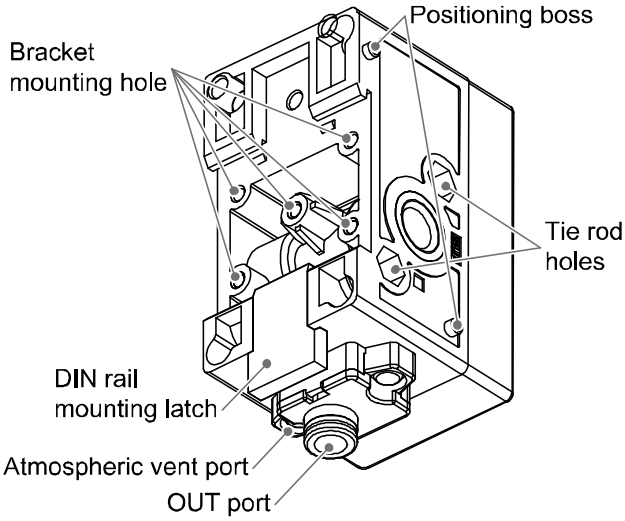

Element	Description
Display	See below
UP button (▲ button)	Selects the mode and the display shown on the sub display, or increases the switch point.
SET button (SET button)	Press this button to change the mode and to fix the settings.
DOWN button (▼ button)	Selects the mode and the display shown on the sub display, or decreases the switch point.
Connector	Electrical connection.
SUP port (Supply port)	Port to supply pressure.
Bracket mounting hole	Used to attach the bracket to the product.
Tie rod holes	Used to connect additional products.
OUT port (Detection port)	Port to be connected to the detection nozzle.
Atmospheric vent port	Port to vent exhaust air to the atmosphere.
DIN rail mounting latch	Used to mount the product on a DIN rail.

Display

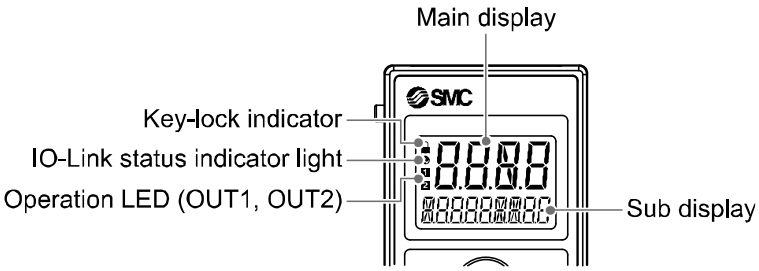

Element	Description
Main display	ON/OFF, display value and error code are displayed. (2 colour display)
Operation LED	Indicates the switch output status. Turns ON (orange) when the switch output is ON.
Sub display	Level meter, display value, switch point, pressure etc. are displayed.
Key-lock indicator	Turns ON when keys are locked.
IO-Link status indicator light	LED is ON when OUT1 is used in IO-Link mode. (LED is OFF in SIO mode)

Specification

■Specifications (ISA3)

Model			ISA3-F	ISA3-G	ISA3-H
Applicable fluid			Dry air (Filtered through a 5 μm filter)		
OUT1 *4 OUT2 *5	Rated distance range		0.01 to 0.03 mm	0.02 to 0.15 mm	0.05 to 0.30 mm
	Displayable/settable range (Distance reference) *1		0 to 60 *2	10 to 300 *2	30 to 500 *2
	Min. display unit (Distance reference) *1		1		
	Rated pressure range		100.0 to 200.0 kPa		
	Displayable range (Pressure value) *3		-20.0 to 220.0 kPa		
	Repeatability		0.005 mm or less	0.010 mm or less	0.020 mm or less
	Temperature characteristics (Reference: 25 °C)		0.010 mm or less	0.015 mm or less	0.030 mm or less
	Hysteresis		0 to variable (Default: 3)	0 to variable (Default: 20)	
OUT2 *6	Rated pressure range		0.0 to 200.0 kPa		
	Setting pressure range		-20.0 to 220.0 kPa		
	Min. display/setting unit		0.1 kPa		
	Repeatability		±0.5%F.S.±1 digit		
	Temperature characteristics (Reference: 25 °C)		±2%F.S.		
	Hysteresis	Hysteresis mode	Variable from 0 *7		
		Window comparator mode			
Withstand pressure			600 kPa		
Detection nozzle			ϕ1.5 *8		
Current flow			5 L/min	12 L/min	22 L/min
Electric spec.	Power supply voltage	Used as switch output device	24 VDC±10% with 10% voltage ripple or less		
		Used as IO-Link device	18 to 30 VDC, including ripple (p-p) 10%		
	Current consumption		25 mA or less		
	Protection		Polarity protection		
Switch output			Select from NPN or PNP open collector output		
	Max. load current		10 mA		
	Max. applied voltage		30.0 V		
	Residual voltage		1 V or less (at 10 mA)		
	Short circuit protection		Provided		
Display			2-screen (3-screen display available: sub display, 4 digits x 2) Main display: 4 digits, 7-segments 2-colour (Orange/Green) Sub display: 9 digits (Upper 9 digits, 4 digits, 3 digits 11-segments, 7-segments for other)		

Model			ISA3-F	ISA3-G	ISA3-H
Environment		Enclosure	IP67 equivalent *9		
		Operating temp. range	Operation: 0 to 50 ºC, Stored: -20 to 70 ºC (No condensation or freezing)		
		Operating humidity range	Operation/Stored: 35 to 85%RH (No condensation)		
		Withstand voltage	1000 VAC or more (in 50/60 Hz) for 1 minute between terminals and housing		
		Insulation resistance	2 MΩ or more at 500 VDC, between terminals and housing		
Piping spec.	Piping option C	Supply port	Rc1/8		
		Detection port	ϕ4 One-touch fitting	ϕ6 One-touch fitting	
	Piping option F	Supply port	G1/8 (ISO1179-1)		
		Detection port	G1/8 (ISO1179-1)		
Cable		Lead wire with connector	M12 lead wire with 4 pin connector, 4 cores ϕ4 5 m		
		Centralized lead wire	M12 lead wire with 4 pin connector part, 4 cores, ϕ4, Insulator O.D.: 1.14 mm Centralized lead wire part, 2 to 3 stations: 8 cores, ϕ6, 5 m 4 to 6 stations: 14 cores, ϕ6, 5 m Conductor O.D.: 0.50 mm, Insulator O.D.: 1.00 mm (2 to 6 stations common)		
Weight			113 g (Cable not included, One-touch fitting)		
Standard			CE marked (EMC directive/RoHS directive)		
Communication spec. (During IO-Link mode)		IO-Link type	Device		
		IO-Link version	V1.1		
		Communication speed	COM2 (38.4 kbps)		
		Configuration file	IODD file *10		
		Min. cycle time	4.2 ms		
		Process data length	Input Data: 8 byte, Output Data: 0 byte		
		On request data communication	Available		
		Data storage function	Available		
		Event function	Available		
		Vendor ID	131 (0x0083)		
		Device ID	ISA3-F∗L-∗: 341 (0x0155) ISA3-G∗L-∗: 342 (0x0156) ISA3-H∗L-∗: 343 (0x0157)		

∗1: Refer to the relationship between the display value and distance on page 20 for details.
∗2: For ISA3-F type, the range is up to 57, with a hysteresis of 3.
For ISA3-G type, the range is up to 280, with a hysteresis of 20.
For ISA3-H type, the range is up to 480, with a hysteresis of 20.
∗3: The pressure value will be indicated on the sub display.
∗4: When used as a switch output device in SIO mode.
∗5: When OUT2 is set to distance detection.
∗6: When OUT2 is set to pressure detection.
∗7: If the pressure fluctuates around the set value, the hysteresis must be set to a value more than the amount of fluctuation, otherwise chattering will occur.
∗8: See the figure on page 29 for details of the detection nozzle.
∗9: Applies only to the digital gap checker body excluding the control unit.
∗10: The configuration file can be downloaded from the SMC website, http://www.smcworld.com
∗11: Any products with tiny scratches, smears, or display colour variation or brightness which does not affect the performance are verified as conformant products.

■Specifications (Regulator)

Refer to the standard regulator catalogue for detailed specifications.

■Specifications (2 port solenoid valve)

Refer to "Option/Part number" (page 13) or the catalogue of the standard 2 port solenoid valve for the detailed specifications of models other than X276.

■Characteristics graph

○Supply pressure dependence characteristics

The detection distance for turning ON the output depends on the supply pressure.
The graphs below show the variation of the distance for the product to turn ON, for 3 types of gap, by changing the supply pressure (±50 kPa) when the product is set to turn ON at 150 kPa supply pressure.

Test conditions	Detection nozzle: ø1.5 Piping: F type: ø4 x ø2.5 tube G, H type: ø6 x ø4 tube Reference pressure: 150 kPa

∗: Use within the rated pressure range (100 kPa to 200 kPa).
It will be impossible to measure the gap when the operating pressure is less than 80 kPa or more than 220 kPa. And the output will be OFF. (Refer to the relationship between the supply pressure and display on page 114.)

ISA3-F | **ISA3-G** | **ISA3-H**

Piping length: 1 m

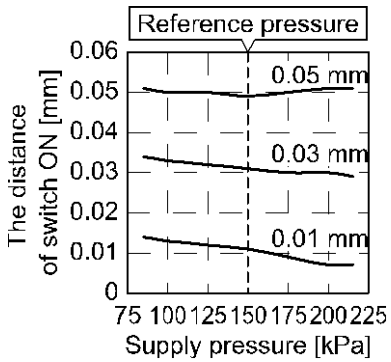

Piping length: 1 m

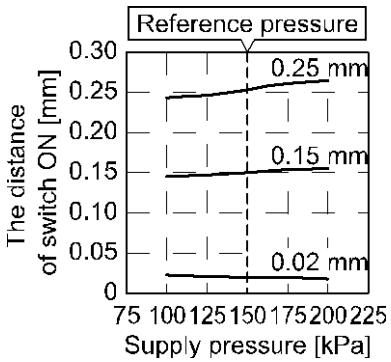

Piping length: 1 m

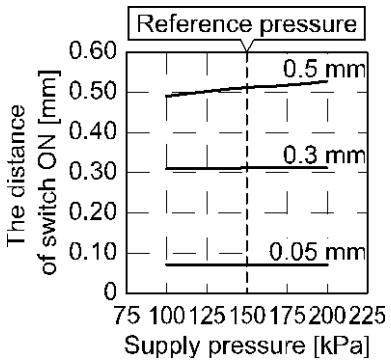

Piping length: 3 m

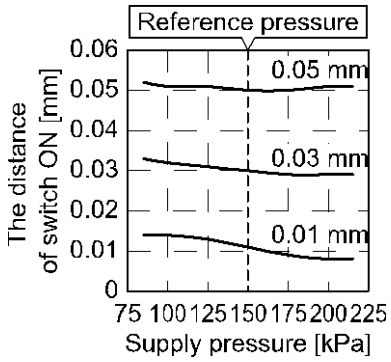

Piping length: 3 m

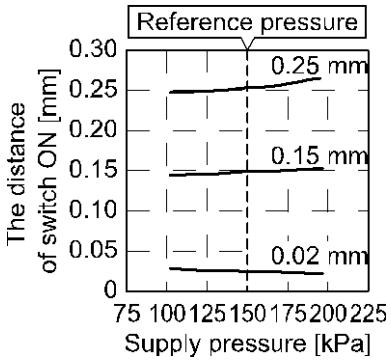

Piping length: 3 m

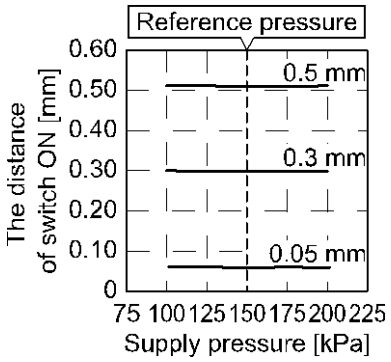

Piping length: 5 m

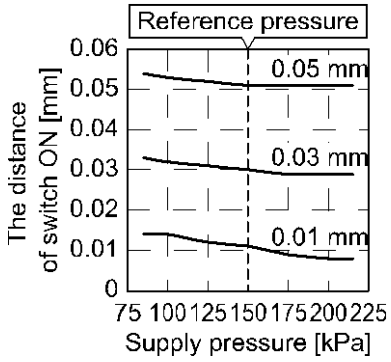

Piping length: 5 m

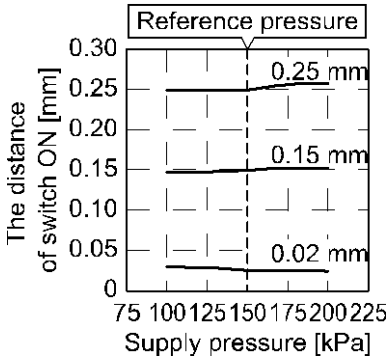

Piping length: 5 m

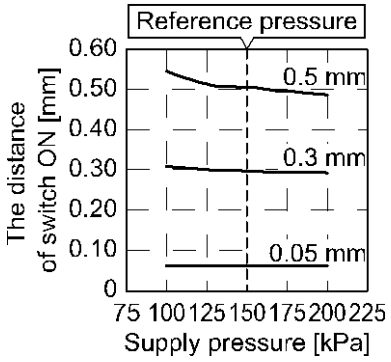

○**Response time**

Response time is the elapsed time between the pressure supply and the turning ON of the switch output. The Response time varies depending on the piping length from the OUT port to the detection nozzle, and the seating condition of the workpiece.
The graphs below show the response time when the workpiece is approached at 90% distance and 0% distance (close contact). (∗: The switch point is 100% distance)
(Example: When the switch point is set to 0.1 mm, the response time when the workpiece is at 0.09 mm and 0.00 mm are measured).

Test conditions	Detection nozzle: ø1.5 Piping: F type: ø4 x ø2.5 tube G, H type: ø6 x ø4 tube Supply pressure: 200 kPa

—— Response time when the workpiece is set at 90% distance.
- - - Response time for close contact of workpiece.

ISA3-F | **ISA3-G** | **ISA3-H**

Piping length: 1m

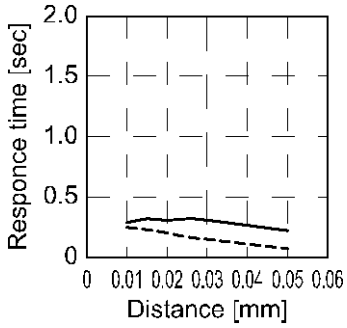

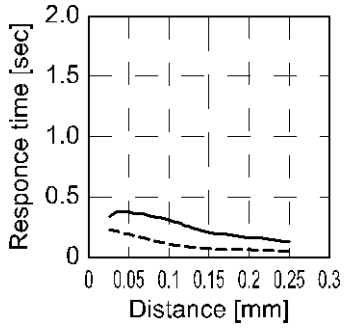

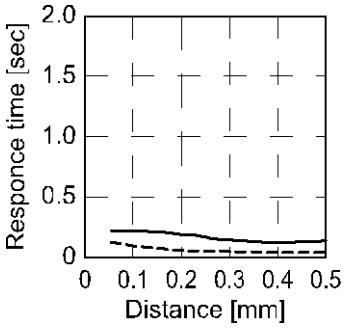

Piping length: 3 m

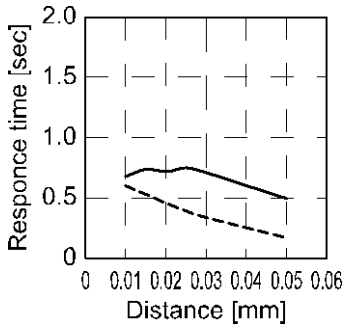

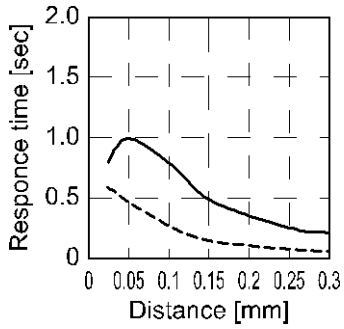

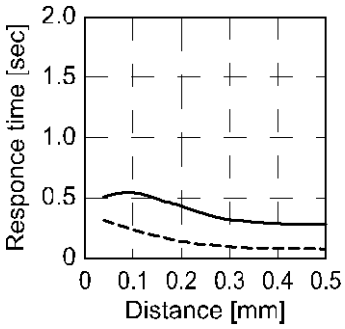

Piping length: 5 m

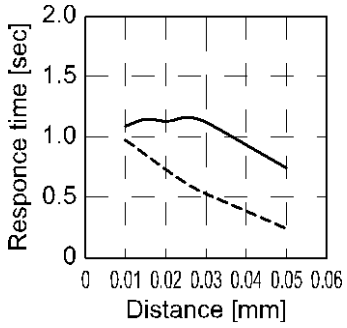

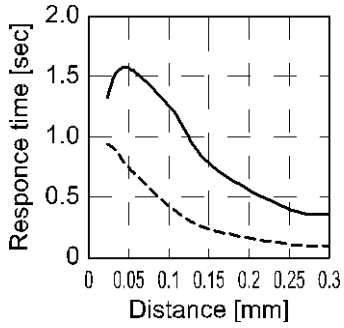

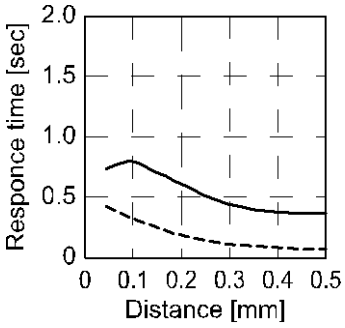

○Relationship between the display value (switch point) and distance

The graphs below show the relationship between [display value (switch point) on the sub display] and [the actual distance between the detection surface and the workpiece].

Relationship between the display value and the distance

These graphs show the relationship between the display value and the distance.

∗1: The values in the table are for reference only). The values will vary depending on the individual product difference and nozzle machining dimensions.

∗2: The zero cut function displays 0 forcibly when the value is below the set value. Within the zero cut-off range, it is possible to change the value to 0, but even though the distance between the hole and workpiece is in close contact with each other, it might not be able to make the display 0.

Test conditions	Detection nozzle: ø1.5 Piping: F type: ø4 x ø2.5 tube 1 m, 3 m, 5 m G, H type: ø6 x ø4 tube 1 m, 3 m, 5 m Supply pressure: 200 kPa

ISA3-F

Piping length: 1m, 3m, 5m

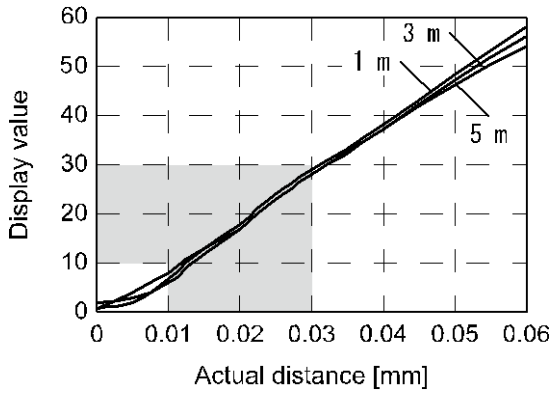

∗: In the default condition, the value can be displayed as 0.

ISA3-G

Piping length: 1m, 3m, 5m

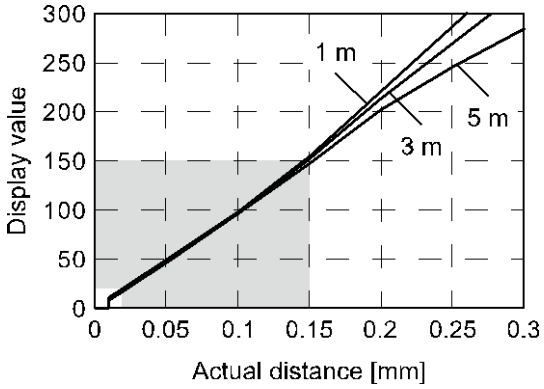

∗: In the default condition, when the distance is below 9, 0 will be displayed.

ISA3-H

Piping length: 1m, 3m, 5m

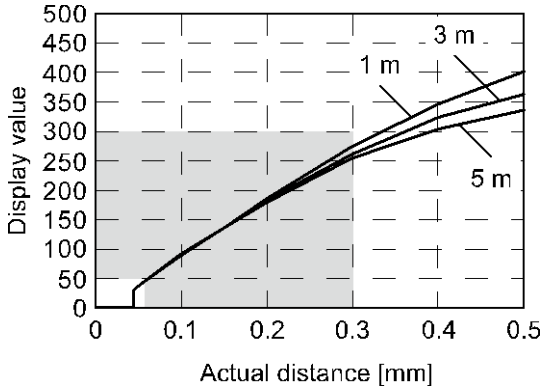

∗: In the default condition, when the distance is below 30, 0 will be displayed.

■Dimensions

•ISA3-□□ (Without control unit, Bracket mounting)

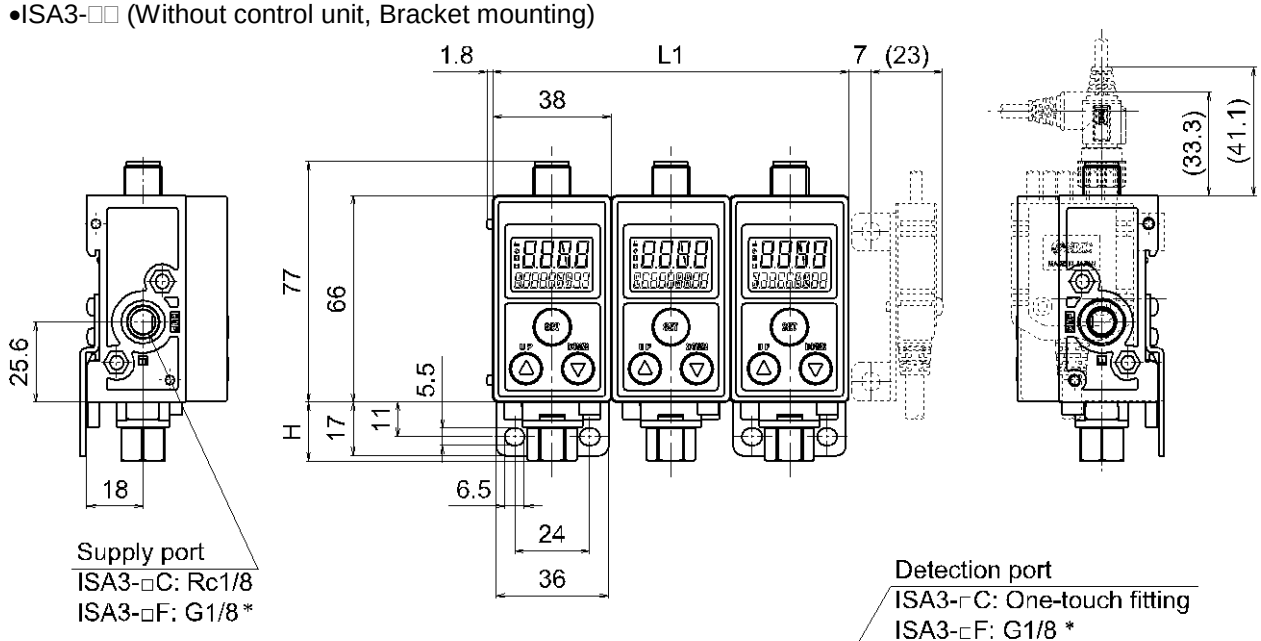

*: ISO1179-1

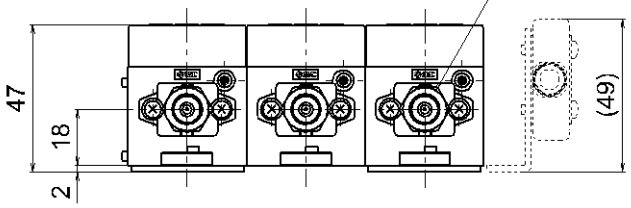

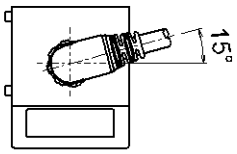

When centralized lead wire is used.

Number of stations	1	2	3	4	5	6
L1	38	76	114	152	190	228

Piping specifications	C (ϕ4 One-touch fitting)	C (ϕ6 One-touch fitting)	F (G-thread (screw))
H	13	13.6	19

•ISA-14 (Bracket when control unit not fitted)

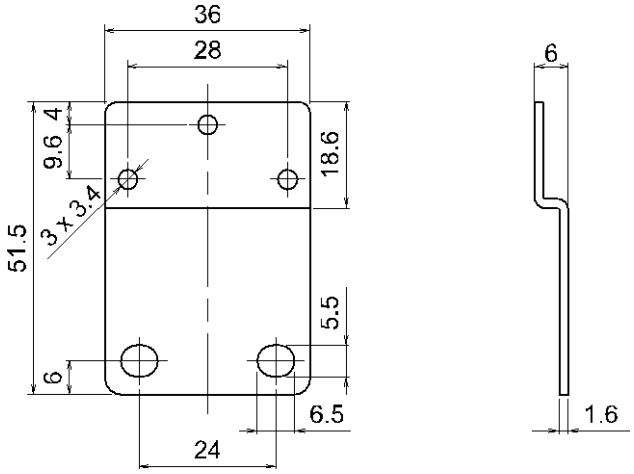

•ISA3-□□ (Without control unit, DIN rail mounting)

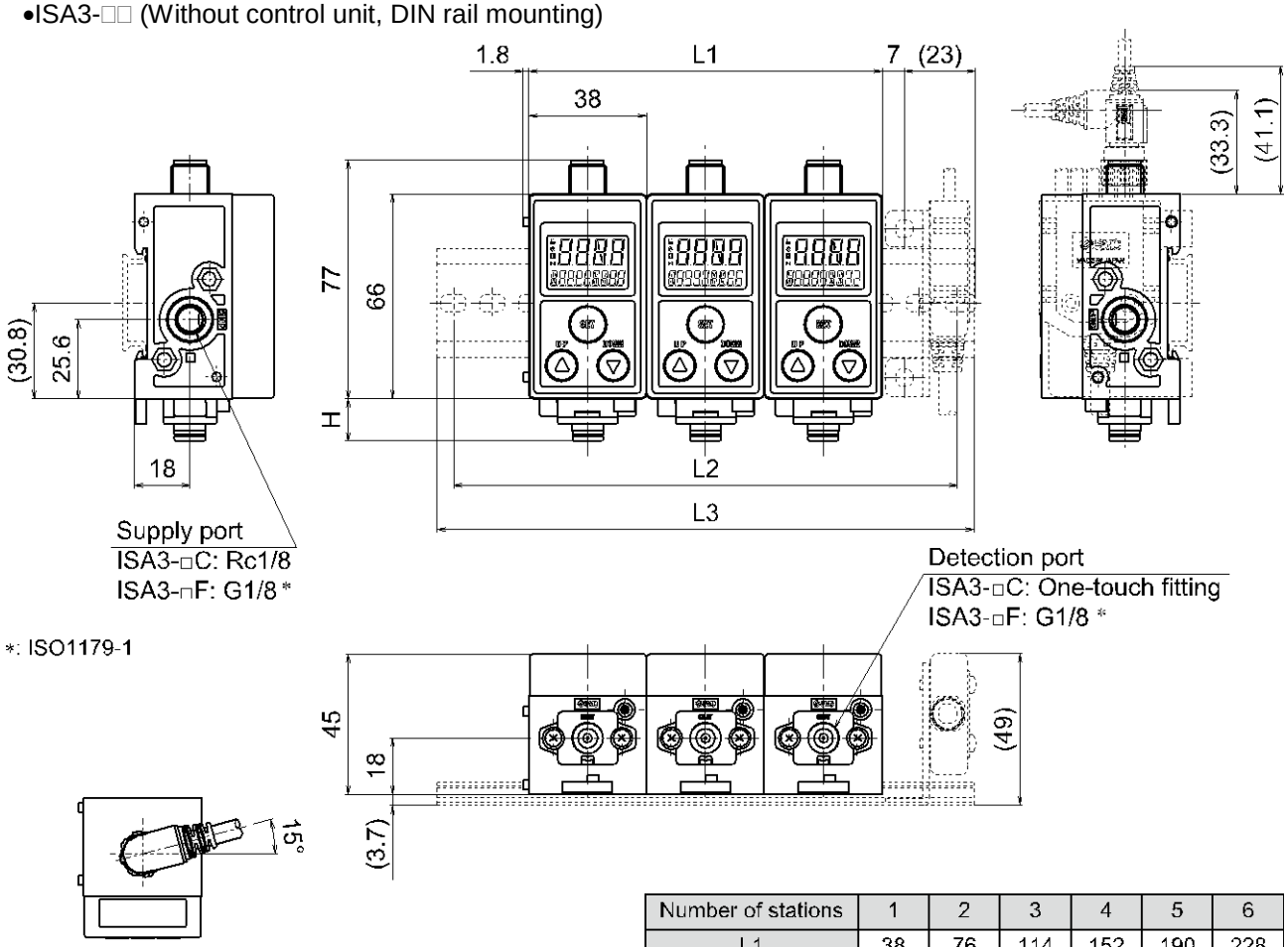

*: ISO1179-1

When centralized lead wire is used.

Number of stations	1	2	3	4	5	6
L1	38	76	114	152	190	228
L2	62.5	125	162.5	200	237.5	275
L3	73	135.5	173	210.5	248	285.5

Piping specifications	C (ϕ4 One-touch fitting)	C (ϕ6 One-touch fitting)	F (G-thread (screw))
H	13	13.6	19

•ISA3-□□□-□□□B-L1/3/5/7 (With control unit, Bracket mounting)

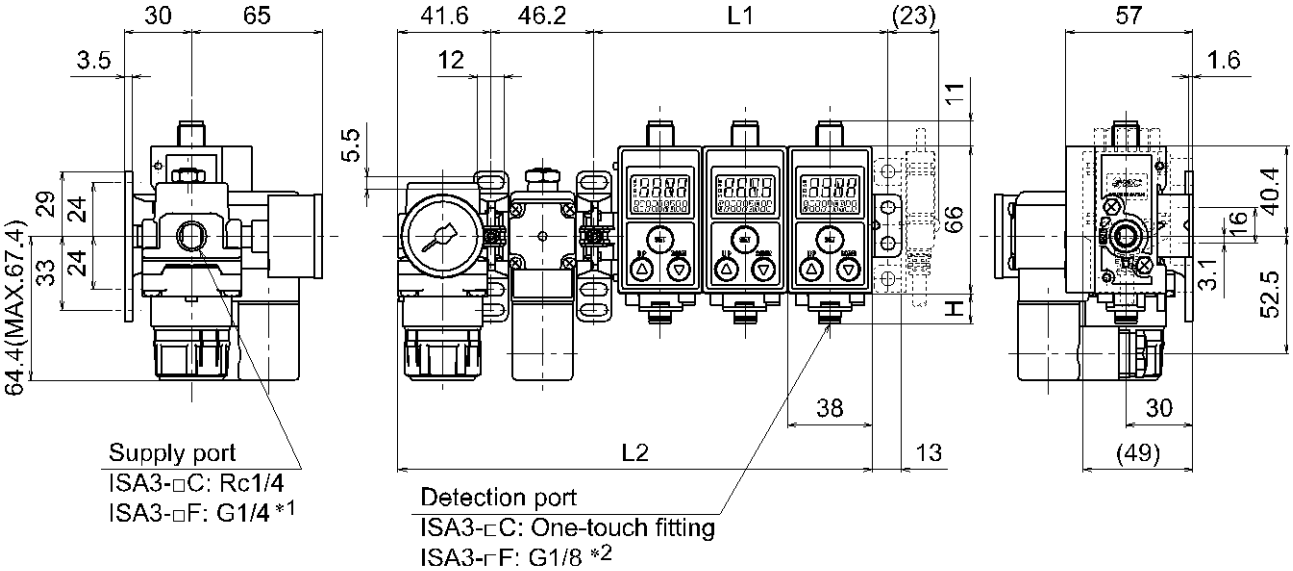

*: Only bracket mounting is applicable for use with a control unit.
*1: ISO16030
*2: ISO1179-1

Number of stations	1	2	3	4	5	6
L1	55.6	93.6	131.6	169.6	207.6	245.6
L2	136.4	174.4	212.4	250.4	288.4	326.4

Piping specifications	C (ϕ4 One-touch fitting)	C (ϕ6 One-touch fitting)	F (G-thread (screw))
H	13	13.6	19

•ISA3-□□□-□□□-B-R1/3/5/7

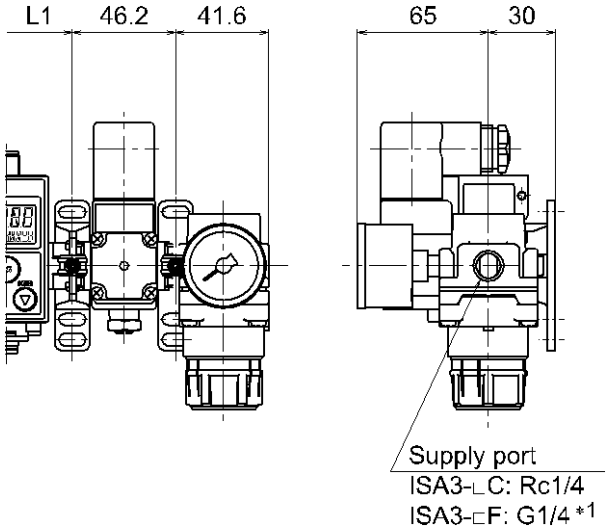

•ISA3-□□□-□□□-B-R0/2/4/6/8

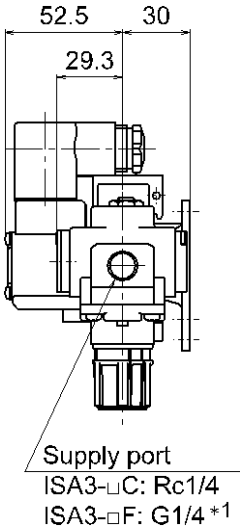

•ISA3-□□□-□□□-B-LN□

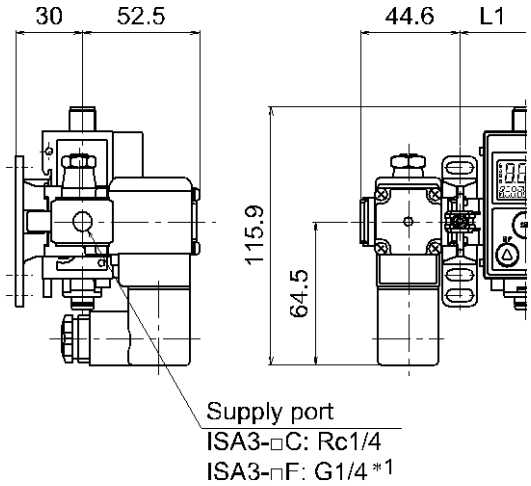

•ISA3-□□□-□□□-B-RN□

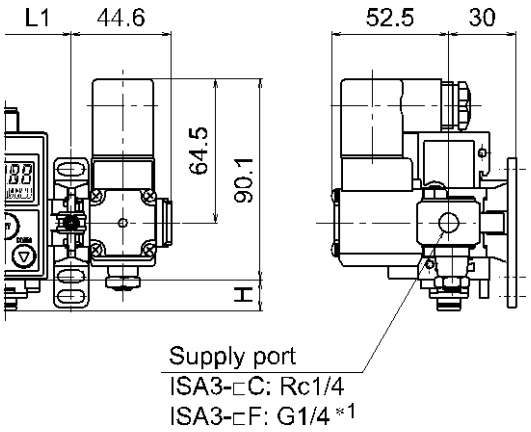

*: Only bracket mounting is applicable for use with a control unit.
*1: ISO16030
*2: ISO1179-1

Number of stations	1	2	3	4	5	6
L1	55.6	93.6	131.6	169.6	207.6	245.6

Piping specifications	C (ϕ4 One-touch fitting)	C (ϕ6 One-touch fitting)	F (G-thread (screw))
H	13	13.6	19

•ISA-17 (Bracket when control unit fitted)

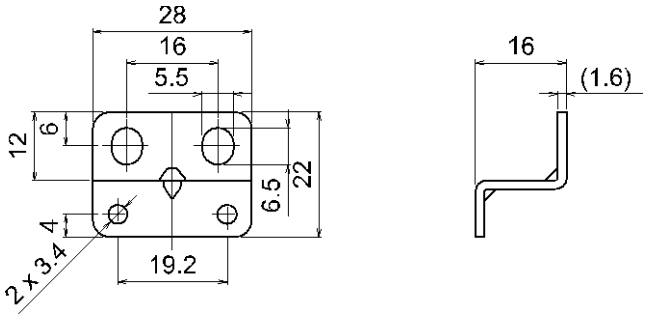

•Y200T-A (Spacer with bracket)

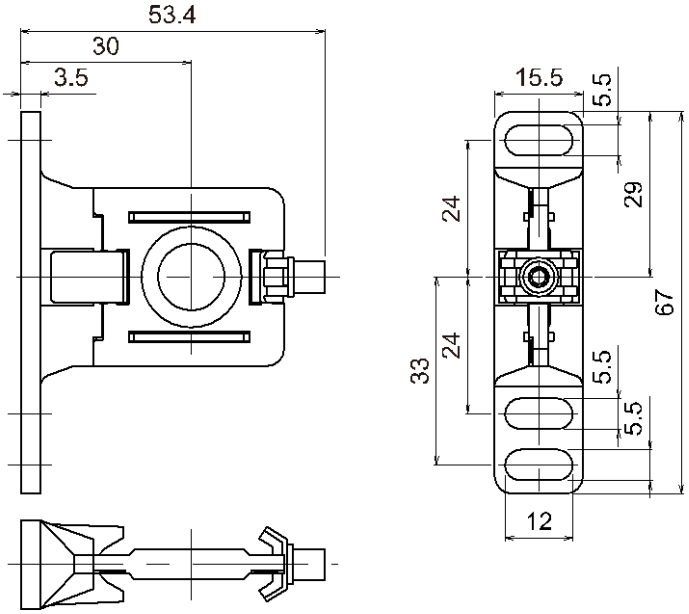

•ISA-20 (Bracket for centralized lead wire)

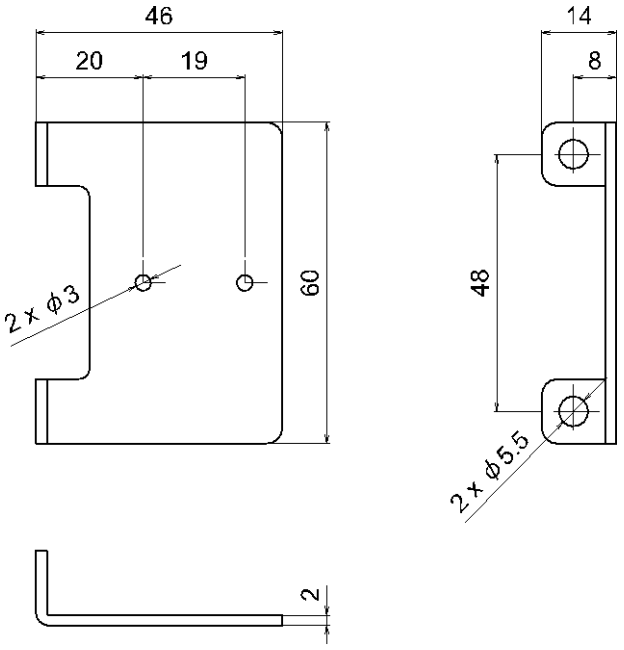

•ZS-31-B (Lead wire with connector (Straight))

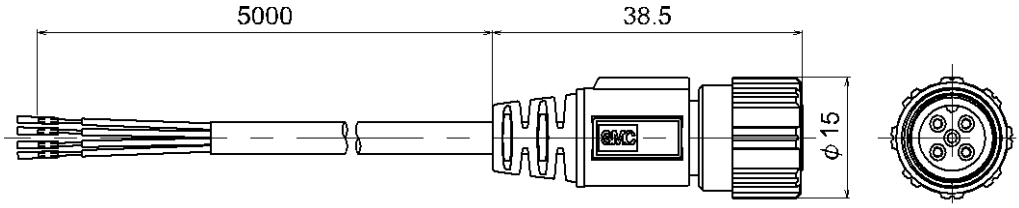

•ZS-31-C (Lead wire with connector (Right angle))

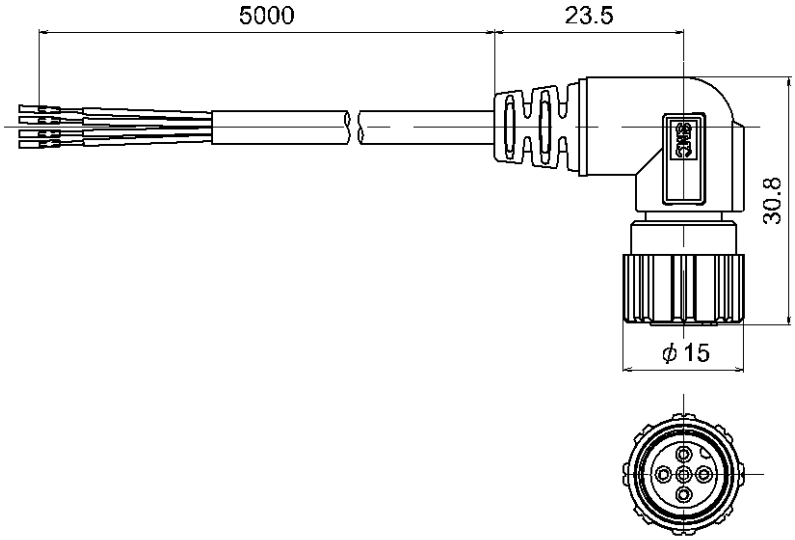

•ISA-21-□ (Centralized lead wire)

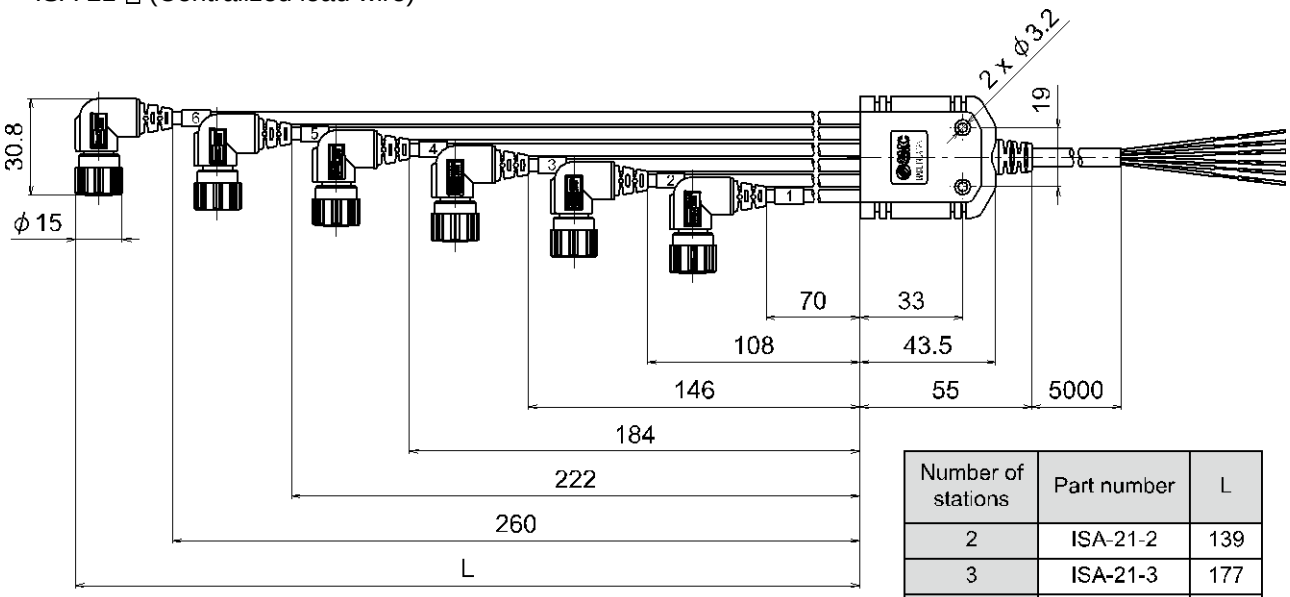

Number of stations	Part number	L
2	ISA-21-2	139
3	ISA-21-3	177
4	ISA-21-4	215
5	ISA-21-5	253
6	ISA-21-6	291

Wiring diagram

•1 to 3 stations

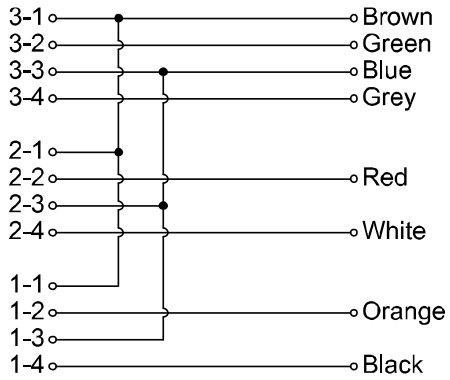

•4 to 6 stations

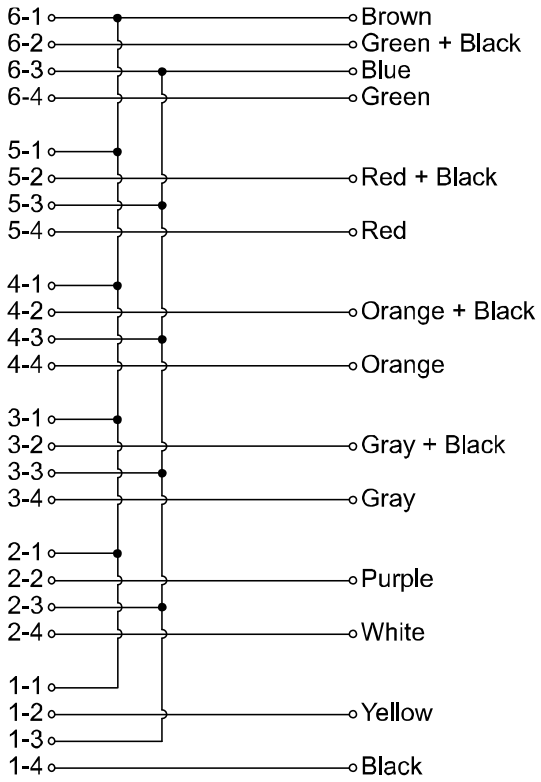

Mounting and Installation

■Piping

○SUP port (supply port)

•Use the correct tightening torque. Refer to the following table for the appropriate tightening torque.
•Fit the seal plug (supplied with the product) to the unused port.

Product	Nominal thread size	Proper tightening torque (Nm)
ISA3	Rc1/8 • G1/8	3 to 5

Product	Nominal thread size	Proper tightening torque (Nm)
Regulator	Rc1/4 • G1/4	8 to 12

○OUT port (detection port)

•Use the correct tightening torque. Refer to the following table for the appropriate tightening torque.

Nominal thread size	Proper tightening torque (Nm)
G1/8	3 to 5

•For ø4 one-touch fitting, use tube with O.D. 4 mm, and I.D. 2.5 mm.
•For ø6 one-touch fitting, use tube with O.D. 6 mm, and I.D. 4 mm.

⚠Warning

•Do not use equipment or fittings that may leak or obstruct the air flow between the product and the detection nozzle.
•The product should be positioned higher than the detection nozzle.

If the product is positioned lower than the detection nozzle, water or oil may enter the detection port, causing a malfunction or operational failure.

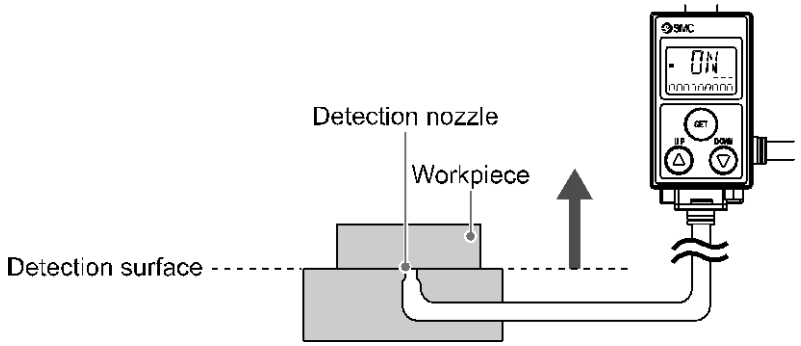

○Atmospheric vent port

- Connect tubing (sold separately) to the atmospheric vent port if there is a possibility that the port could be blocked by water or dust.
- Recommended tube is TU0425 (material: polyurethane, O.D. ø4, I.D. ø2.5) made by SMC.
- The other end of the air tubing should be routed to a safe place to prevent it from being exposed to water or dust.
- Ensure the tubing has no sharp bends.

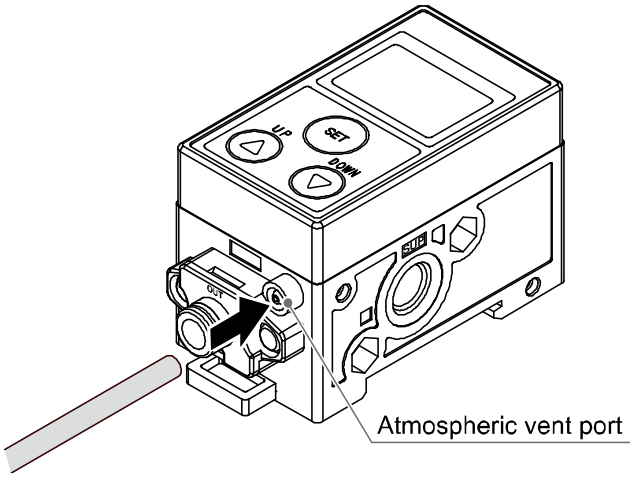

○Detection Nozzle shape

The Nozzle shape must be similar to Figure 1.
Do not chamfer the nozzle as shown in Figure 2, as the characteristics will be affected.

Fig.1: Recommended nozzle shape

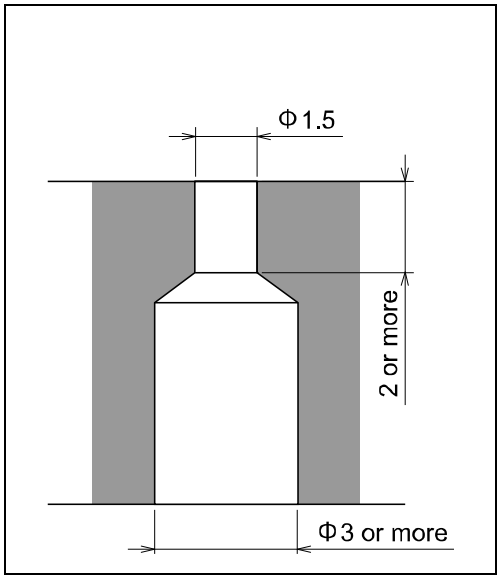

Fig.2: Unsuitable nozzle shape

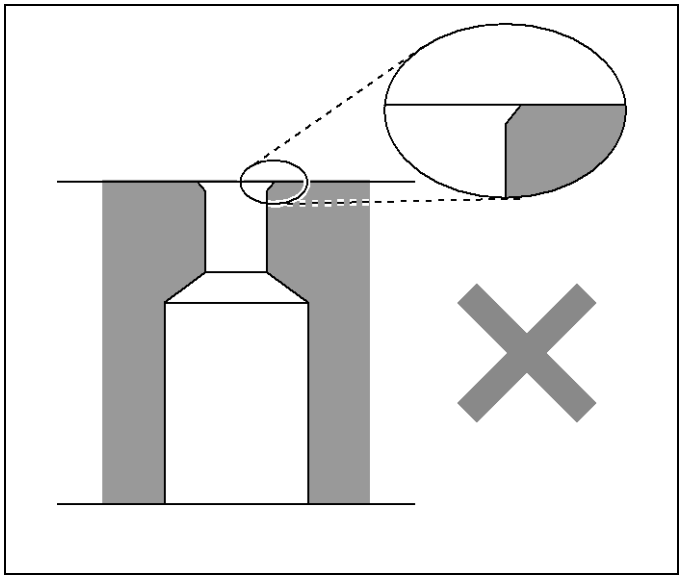

○Restrictor setting of 2 port solenoid valve

Air can be continuously supplied by adjusting the restrictor. This reduces the possibility of water or cutting oil etc. entering the 2 port solenoid valve from the OUT port (detection port).

- Turn off the power to the 2 port solenoid valve.
- Adjust the restrictor by turning the screw with a flat head screw driver etc.

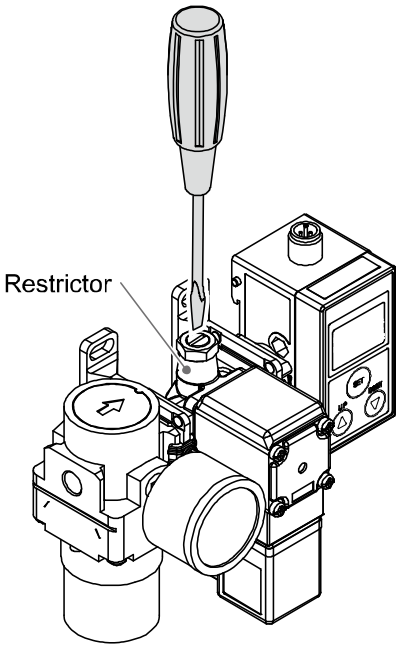

Clockwise: Restrictor closed
Counterclockwise: Restrictor opened

*: Do not turn the restrictor screw more than 5 rotations from the fully closed position as the screw will come out.

- Turn on the 2 port solenoid valve. Check that no water or cutting oil etc. is exhausted from the detection nozzle.
- When water or cutting oil etc. is exhausted, turn the restrictor screw in a clockwise direction (closing).

■Installation

∗: Connect piping before mounting to the DIN rail or bracket.

(1) If the piping is connected while the product is mounted on a bracket or DIN rail, the bracket or DIN rail might be bent.
(2) If the piping is connected while the display is held with a vice, the display might be damaged.
(3) If a tool comes into contact with the boss, it might be broken. Therefore, connect the piping carefully.

○DIN rail

Mounting
(1) Hook the claw part 1 to the DIN rail.
(2) Push the claw part 2 down until it clicks.

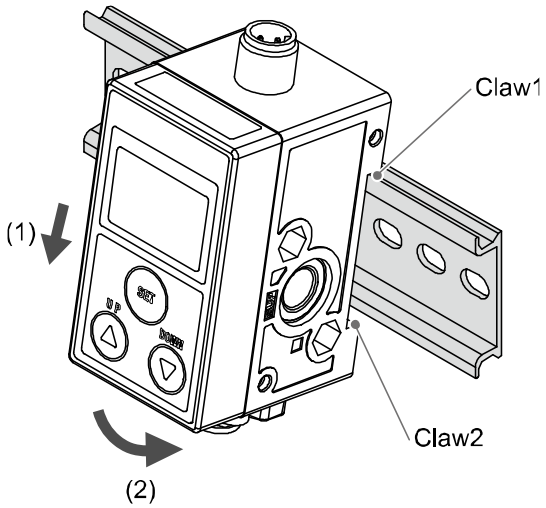

Removal
(1) Pull the DIN rail mounting latch downward for unlocking.
(2) Pull out the OUT port (detection port) side.

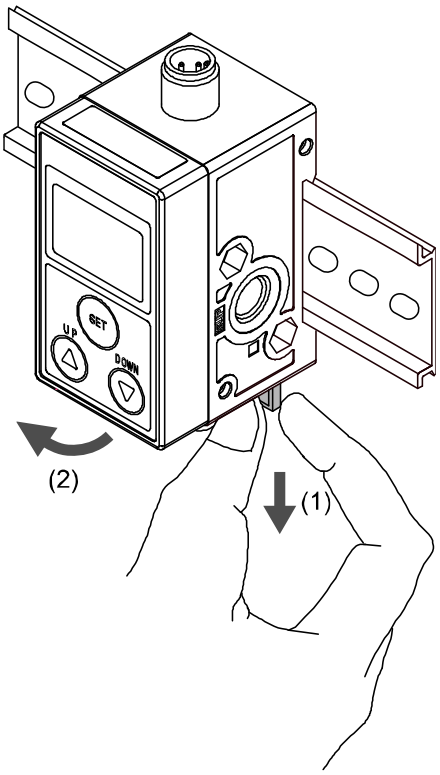

○**Bracket**

- Mount the bracket using the mounting screws supplied.
- The tightening torque of the mounting screw must be 0.45 Nm ±10%.

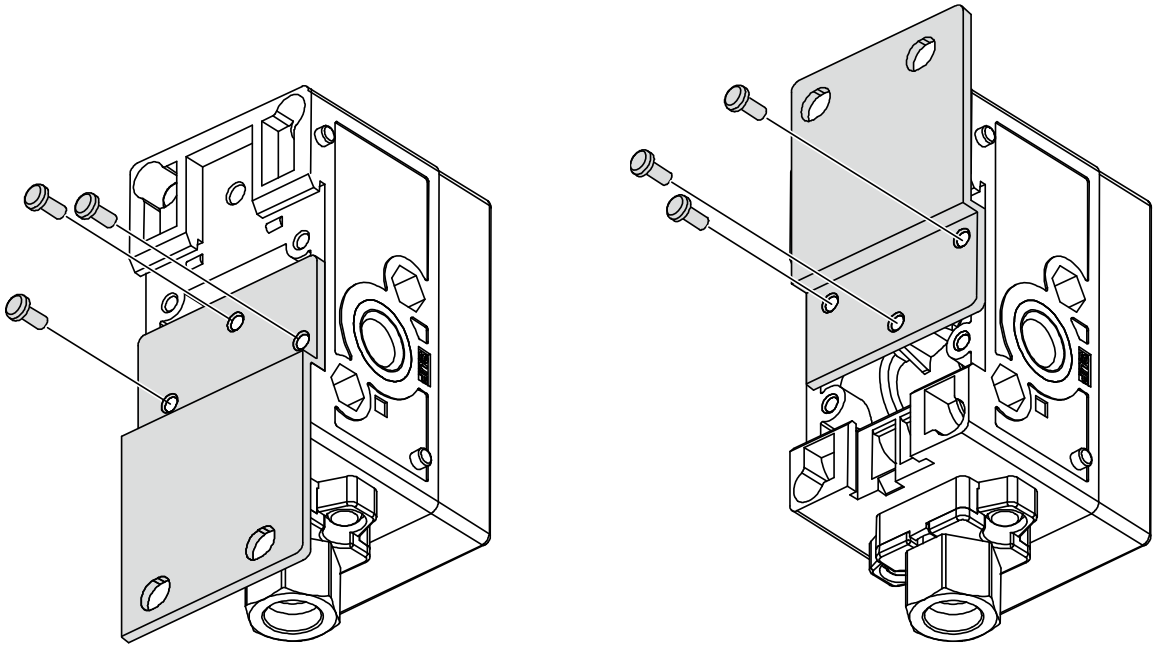

- When the product is mounted using the bracket, fix with M5 screws (2 pcs.) or equivalent.
- The Bracket thickness is approx. 1.6 mm.
- Refer to the bracket dimension drawing (page 21) for the mounting hole dimensions.

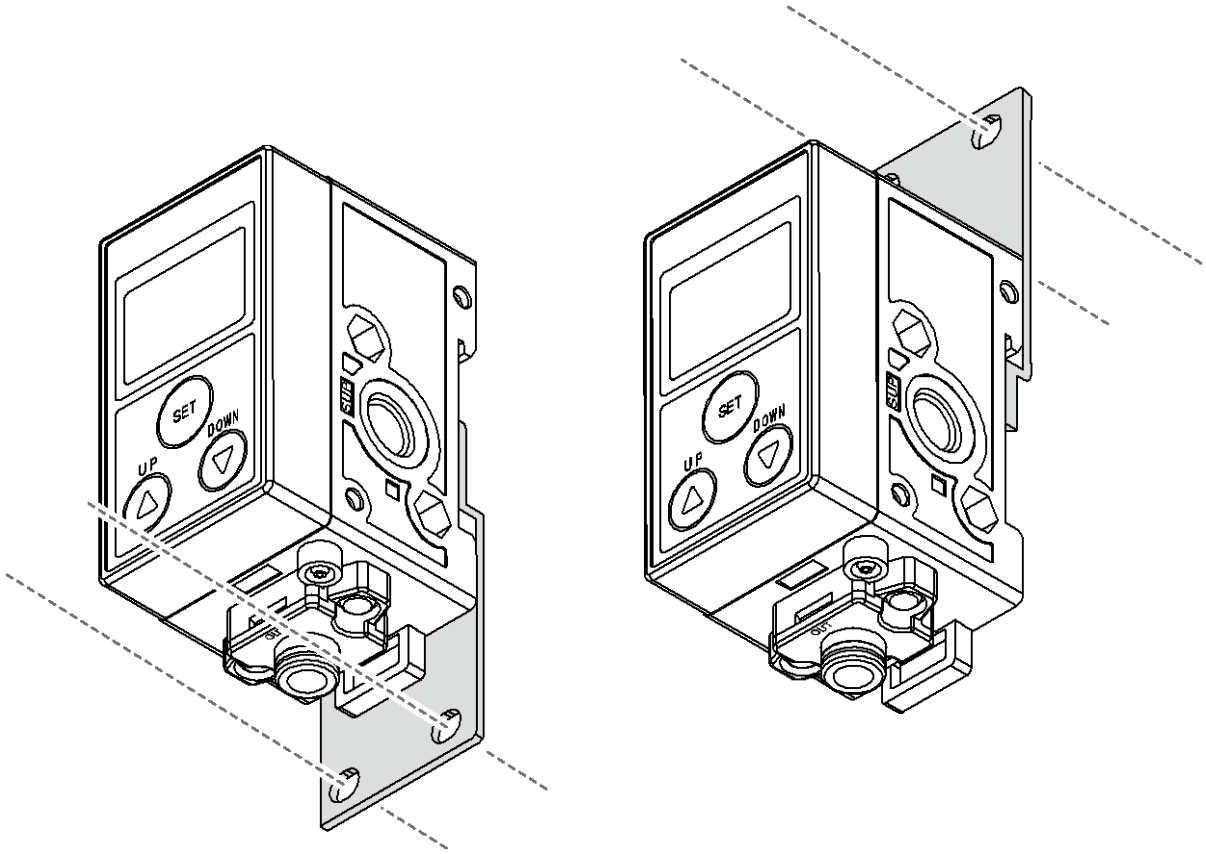

•Mounting position of the bracket

2 stations
(Mount to 1st. and 2nd. station)

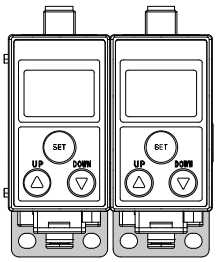

1 2

n stations
(Mount to 1st. and nth. station)

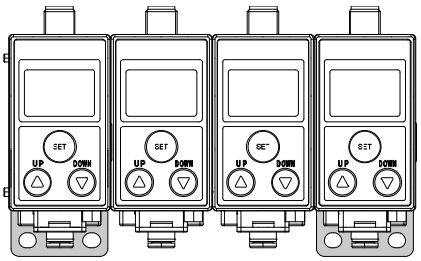

1 2 · · · n

○**Bracket (when control unit fitted)**

•When a product with control unit is ordered, the bracket will be mounted to the product before shipment.

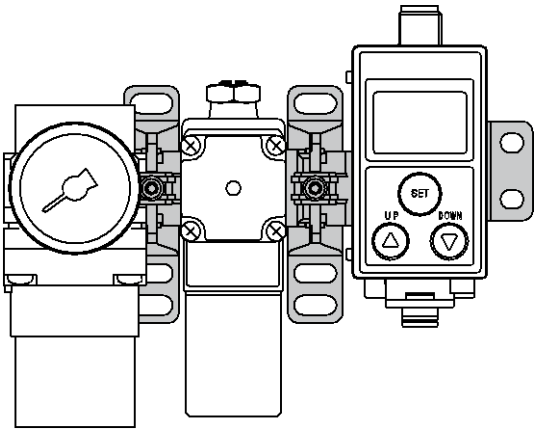

•Mount the spacer with bracket using an M5 mounting screw or equivalent.
•Thickness of the spacer with bracket is approximately 3.5 mm.
•Refer to the "Bracket mounting" dimensions (page 23) for the mounting hole dimensions.

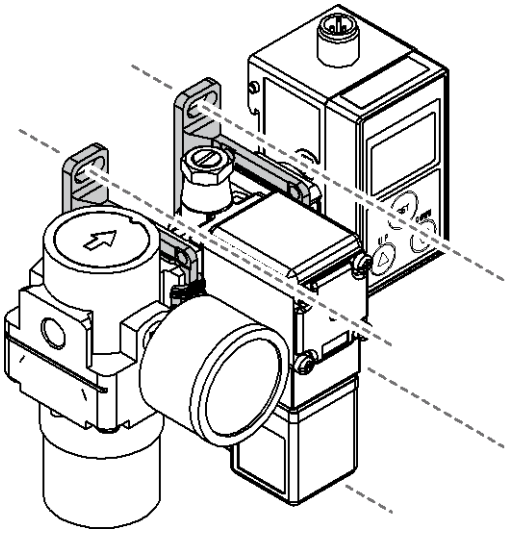

•Mount the bracket using M5 mounting screws (2 pcs.) or equivalent.
•The bracket plate thickness is approximately 1.6 mm.
•Refer to the "Bracket mounting" dimensions (page 23) for the mounting hole dimensions.

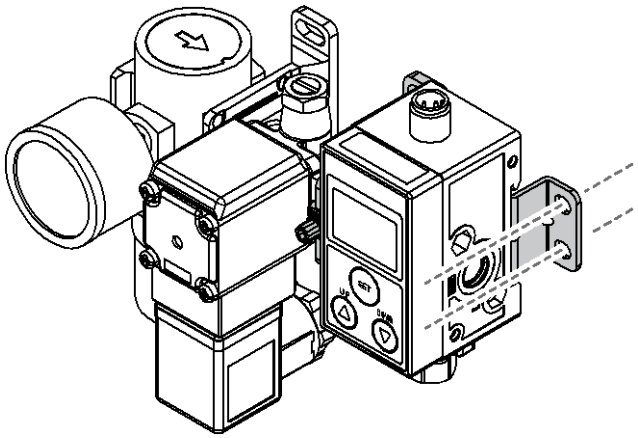

○**Assembly procedure to increase/decrease the number of product.**

•Remove the joint screws of product using a Phillips head screwdriver and separate the Product body.

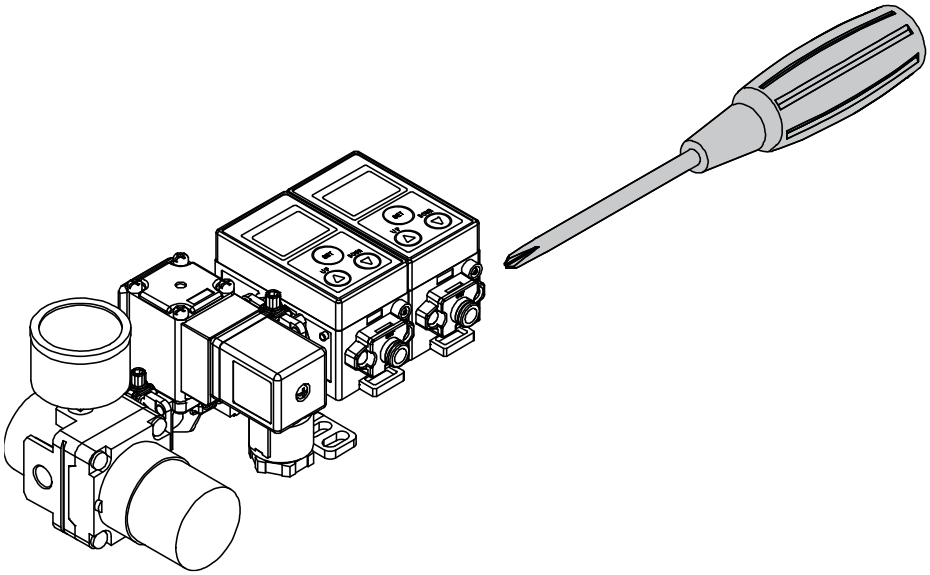

∗: Take care not to lose the seals.

•Insert a product and the seal for extra station (ISA-15) between the products to increase the number of stations.

•Remove a product and the seal from the products to decrease the number of stations.

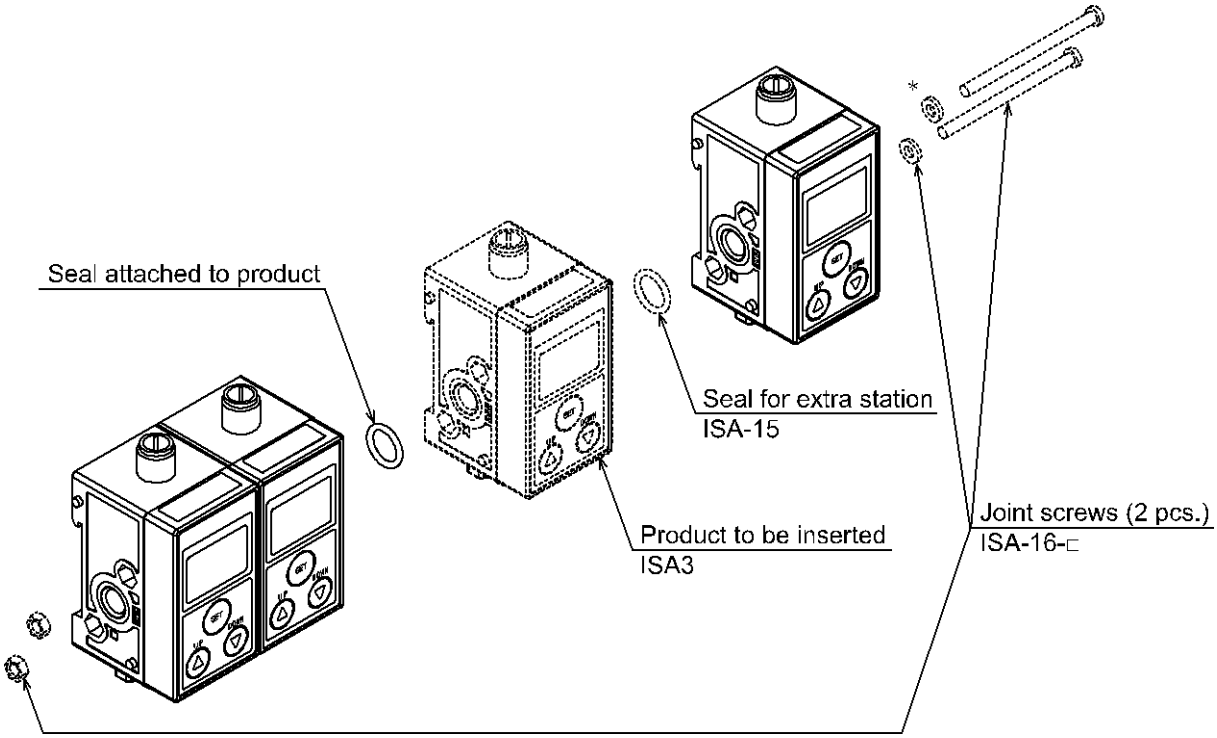

∗: Spacers are included for 4 and 6 stations.

•Connect the products using the joint screws. (Tightening torque: 0.75 Nm ±10%)

■Wiring

○Mounting and removal of connector

- Tighten the connector by hand.
- Align the body connector key and the cable connector key groove to insert vertically.
- Turn the knurled part of the cable side connector clockwise.
- Connection is complete when the knurled part is fully tightened. Check that the connection is not loose.

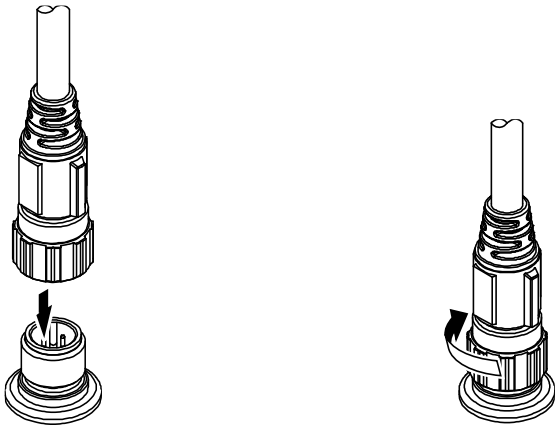

○Connector pin No. (Body side)

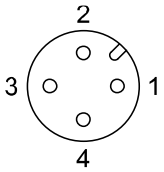

Connector pin No.	Description
1	DC(+)
2	OUT2
3	DC(-)
4	OUT1(C/Q)

○**Connector pin No. (Cable side)**

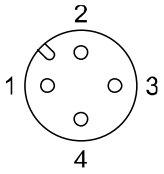

Connector pin No.	Lead wire colour	Description
1	Brown	DC(+)
2	White	OUT2
3	Blue	DC(-)
4	Black	OUT1(C/Q)

•ZS-31-B (Cable with connector)

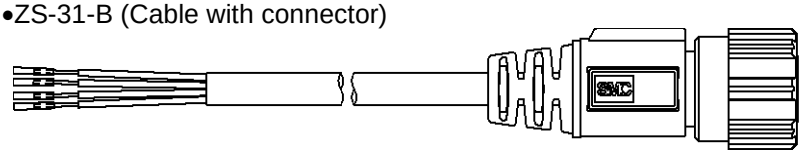

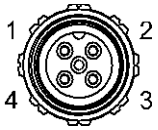

•ZS-31-C (Cable with connector)

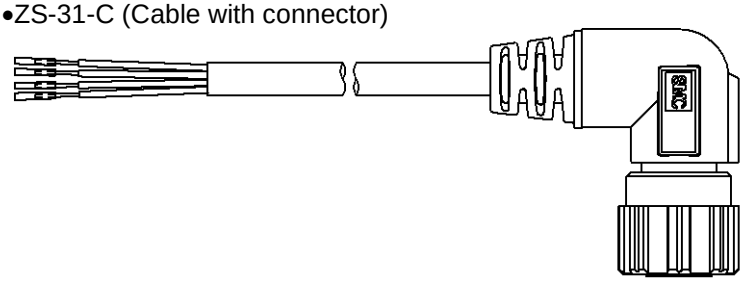

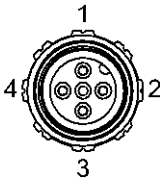

•ISA-21-□ (Centralized lead wire)

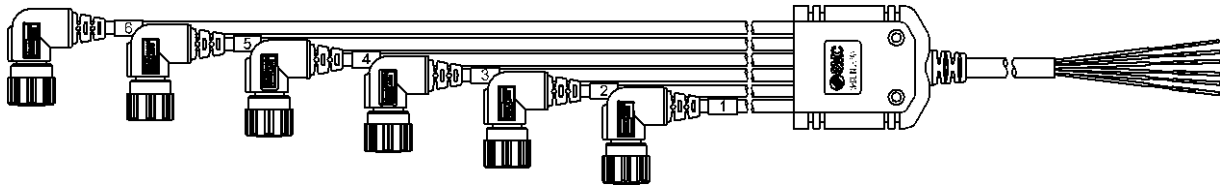

•For 2 to 3 stations

M12 Connector No.	Pin No.	Description	Lead wire colour	(Output wire colour)
1	1	DC(+)	Brown *	Orange
	2	OUT2		
	3	DC(-)	Blue *	Black
	4	OUT1		
2	1	DC(+)	Brown *	Red
	2	OUT2		
	3	DC(-)	Blue *	White
	4	OUT1		
3	1	DC(+)	Brown *	Green
	2	OUT2		
	3	DC(-)	Blue *	Gray
	4	OUT1		

•For 4 to 6 stations

M12 Connector No.	Pin No.	Description	Lead wire colour	(Output wire colour)
1	1	DC(+)	Brown *	Yellow
	2	OUT2		
	3	DC(-)	Blue *	Black
	4	OUT1		
2	1	DC(+)	Brown *	Purple
	2	OUT2		
	3	DC(-)	Blue *	White
	4	OUT1		
3	1	DC(+)	Brown *	Gray/Black
	2	OUT2		
	3	DC(-)	Blue *	Gray
	4	OUT1		
4	1	DC(+)	Brown *	Orange/Black
	2	OUT2		
	3	DC(-)	Blue *	Orange
	4	OUT1		
5	1	DC(+)	Brown *	Red/Black
	2	OUT2		
	3	DC(-)	Blue *	Red
	4	OUT1		
6	1	DC(+)	Brown *	Green/Black
	2	OUT2		
	3	DC(-)	Blue *	Green
	4	OUT1		

*: Brown and blue are connected in the product inside.

⚠ Caution

The electrical entry of centralized lead wire for M12 connector is on the right side.
If the supply port on the right side is used, arrange the centralized lead wire so that it does not interfere with the control unit.

○**Internal circuit and wiring examples (for cable with connector)**

Wire the product according to the circuit diagram below.

•Used as switch output device

Setting of NPN open collector 2 outputs

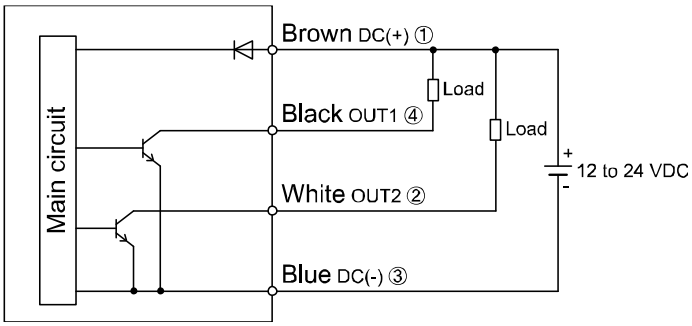

Setting of PNP open collector 2 outputs

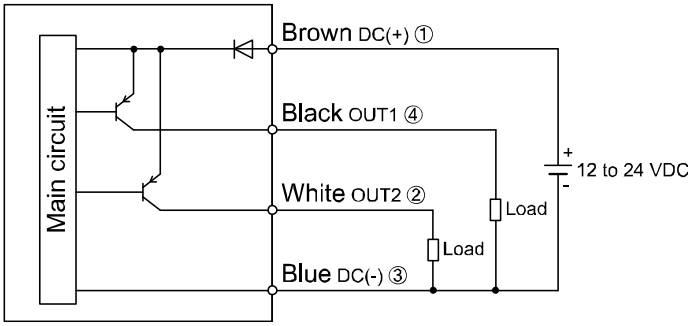

•Used as IO-Link device

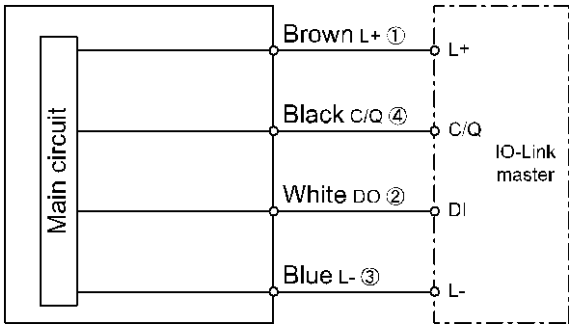

∗: Numbers in the figures show the connector pin layout.

◆Refer to the VX2 series Operation Manual for wiring details of the VX2 series (2 port solenoid valve).

■Part structure

○**Without control unit**

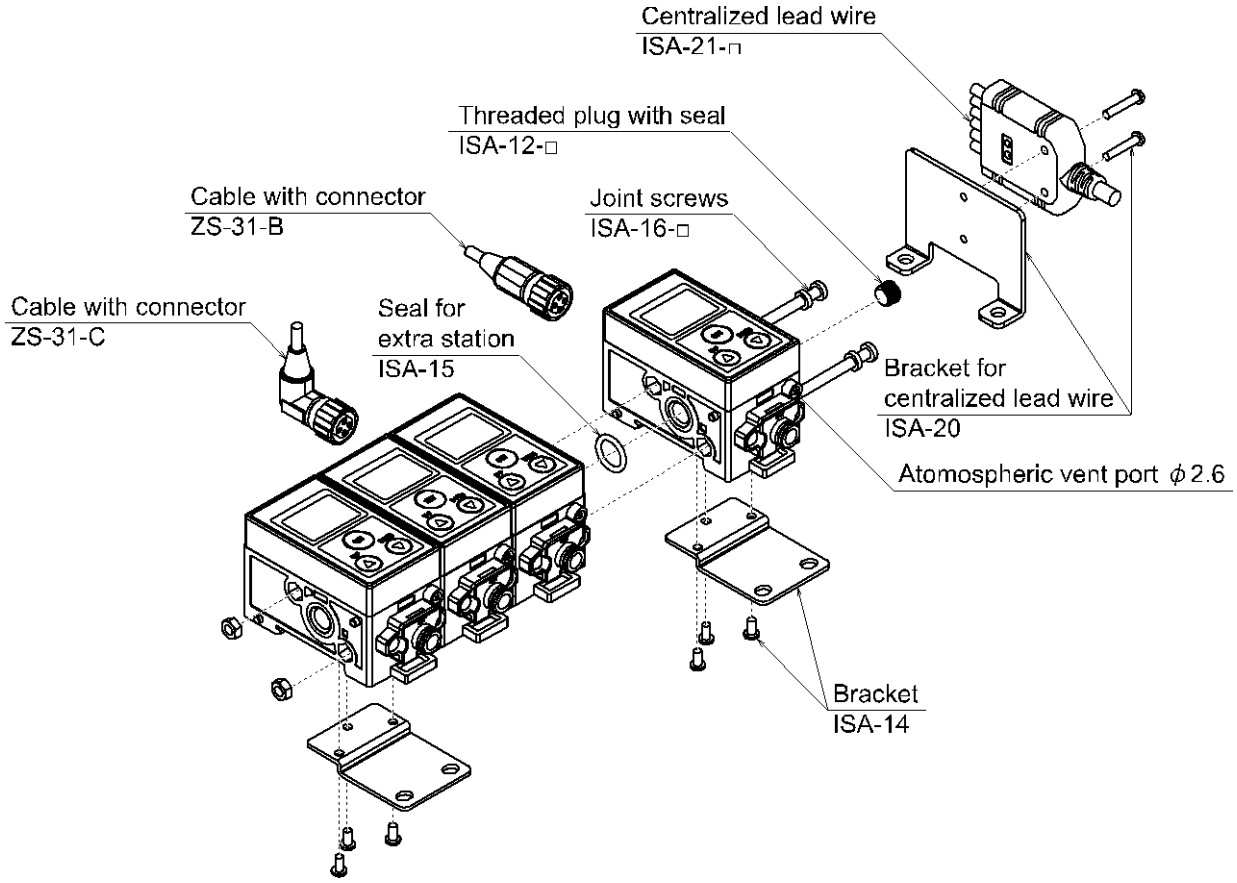

○**With control unit (Supply port: Left side)**

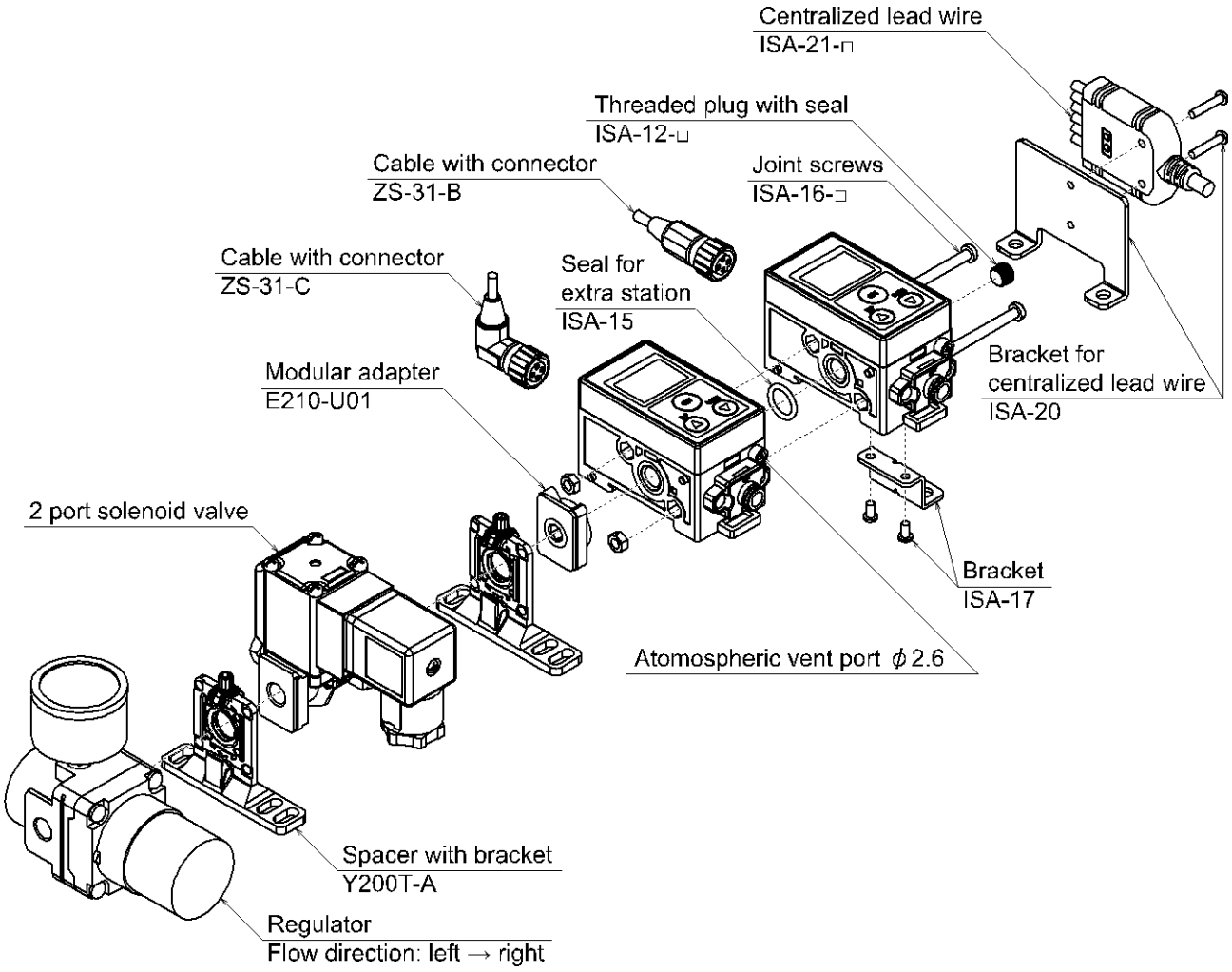

○**With control unit (Supply port: Right side)**

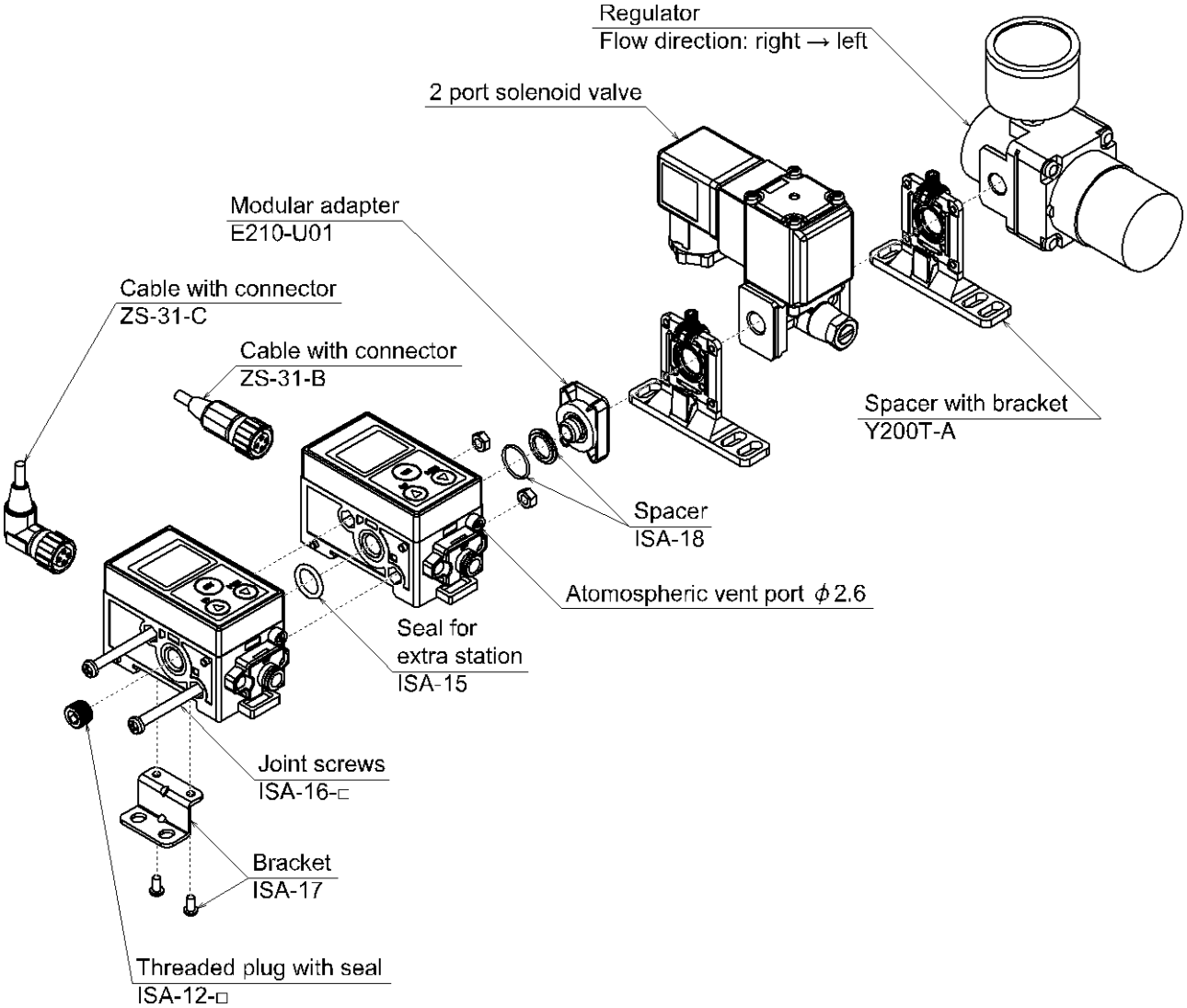

Outline of Settings [Measurement mode]

Power is supplied

The product code is displayed for approximately 3 seconds after power is supplied.
Then, measurement mode will be displayed.

∗: Within approximately 0.2 seconds after power-on, the switch starts.

[Measurement mode]

Detects the pressure after power is supplied, and indicates the display and switch operating status. This is the basic mode; other modes should be selected for set-point changes and other function settings.

Measurement mode screen

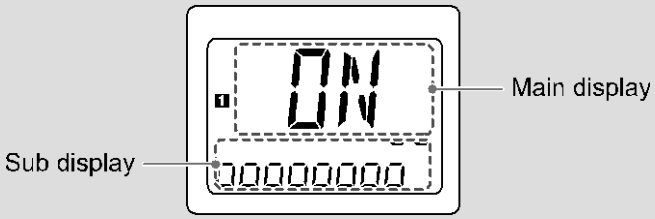

Sub display

In measurement mode, the sub display can be temporarily changed by pressing the UP or DOWN buttons.

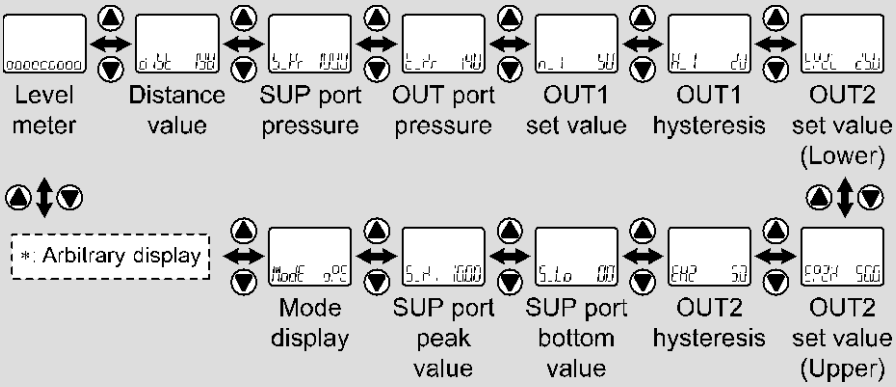

∗: One arbitrary display mode can be added to the sub display by setting the [F10] sub display.
If the sub display is switched during the arbitrary display setting, the display will be returned to the arbitrary display 30 seconds later. (The default setting does not include arbitrary display.)

Press the SET button once.

Press the SET button between 1 and 3 seconds

Press the SET button between 3 and 5 seconds

[3 step setting mode]
Set either of set value or hysteresis.
(Refer to page 48)

[Simple setting mode]
Select the set value, hysteresis and delay time.
(Refer to page 50)

[Function selection mode]
Change the function settings.
(Refer to page 52)

[Other Settings]
•Zero-clear function
•Key-lock function
(Refer to page 86)

∗: The outputs will continue to operate during setting.
∗: If a button operation is not performed for 30 seconds during the setting, the display will flash.
(This is to prevent the setting from remaining incomplete if, for instance, an operator were to leave during setting.)
∗: 3 step setting mode, simple setting mode and function selection mode settings are reflected each other.

■Measurement mode

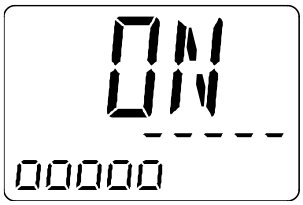

Placement verification screen
Switch point value bar
Level meter

•Placement verification screen (Main display)
The Placement condition is indicated by the switch output status (ON/OFF).

•Level meter (Sub display)

Element	Description
Switch point value bar	When OUT1 is set to hysteresis mode, the bar equivalent to the switch point, which has been set as the set value of OUT1, is displayed automatically. *: OUT1 switch point only When OUT1 is set to window comparator mode, the bar will not be displayed.
Level meter	The workpiece gap condition approaching the nozzle is indicated by the number of "0" displayed. This display is a reference only. It is not an accurate distance measurement.

○Relationship between the display and the placement status (e.g.: hysteresis mode, reversed output)

Placement surface
(Detection nozzle)

Display	Placement status	Switch output
OFF - - 0 — Level meter "0" is not displayed.	Detection surface and the workpiece are very distant.	Switch output is OFF.
OFF - - 00 — Switch point value bar "- -" and level meter "0" are not close.	Detection surface and the workpiece are too far apart.	Switch output is OFF.
OFF - - 0000000 — Switch point value bar "- -" and level meter "0" are close.	Detection surface and the workpiece are slightly apart.	Switch output is OFF.
ON - - 00000000 — Level meter "0" has reached switch point value bar "- -".	Workpiece is placed on the detection surface.	Switch output is ON.
ON - - 000000000 — Level meter "0" reaches its maximum.	Workpiece is in close contact with the detection surface.	Switch output is ON.

*: For normal output, the switch point is displayed on the left side.

Switch Point Setting

It is possible to change OUT1: switch point and OUT2: pressure set value/switch point.
OUT2 is set to pressure setting mode (pressure detection mode) as a default. When changing to switch point setting mode (distance setting mode), set in the function selection mode (page 52).

■Default settings of OUT1 (hysteresis mode, reversed output setting)

Refer to the figure below for the default settings of OUT1.

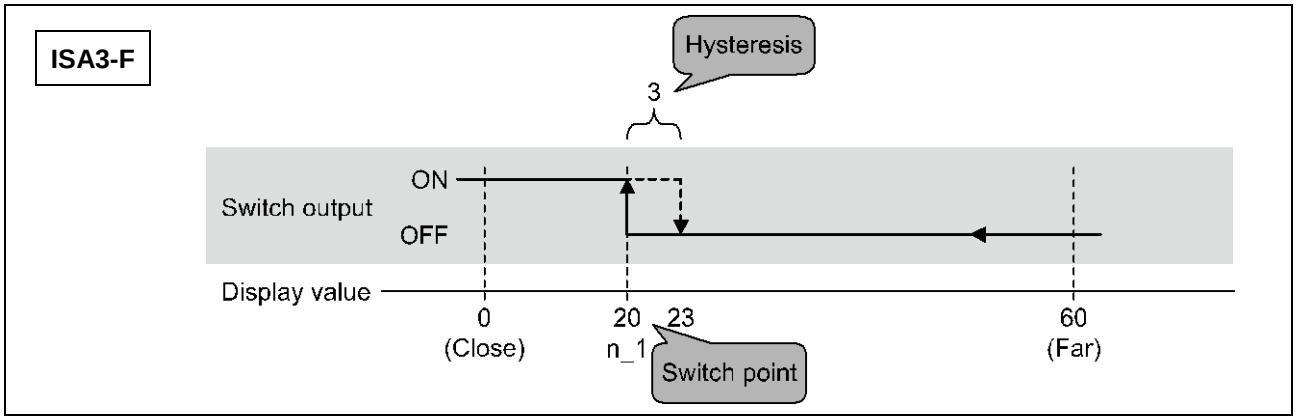

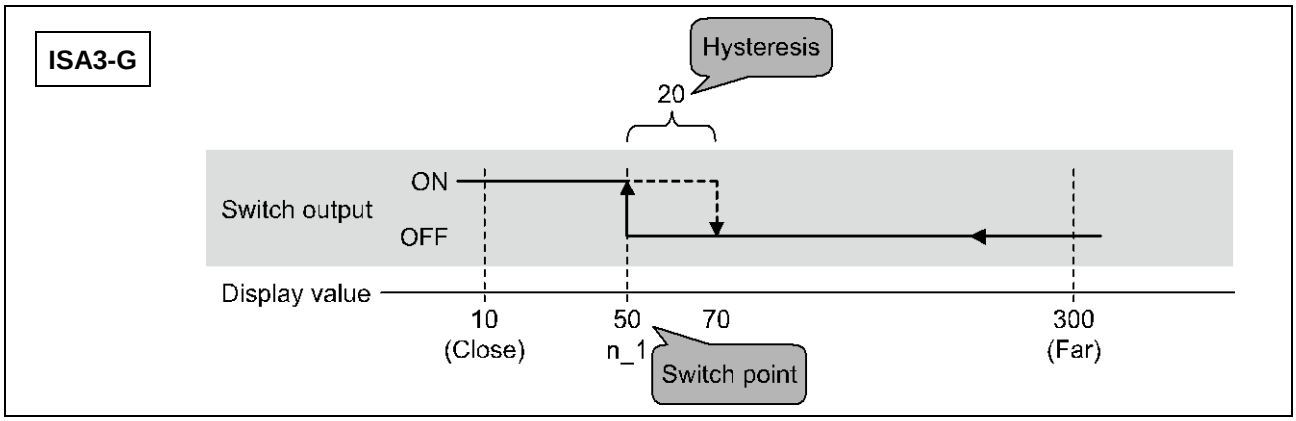

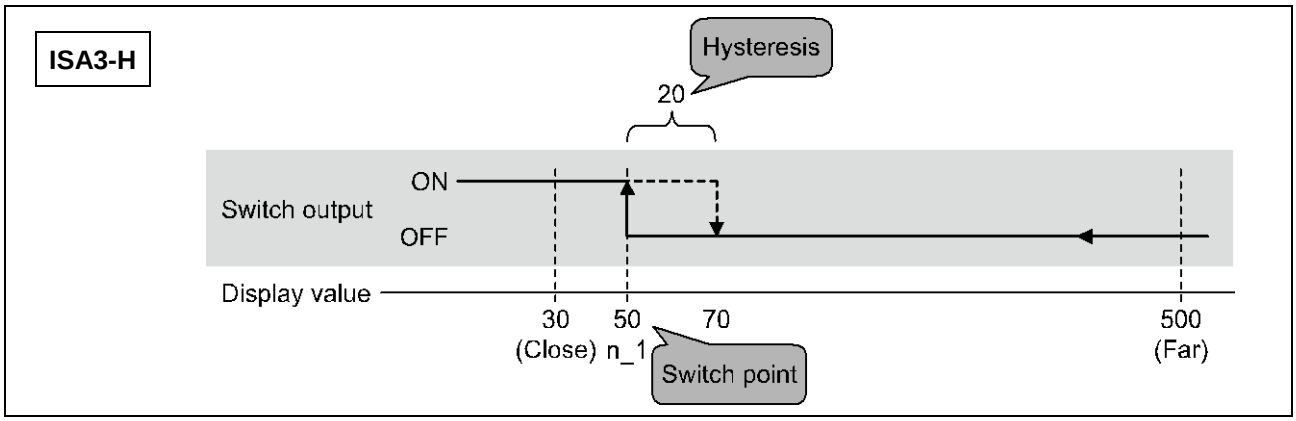

The switch output turns ON when the display value is less than switch point. (Solid line in the chart)
The switch output turns OFF when the display value is greater than the switch point added to the hysteresis value. (Dashed line in the chart)

Other output mode of OUT1

•Hysteresis mode, Normal output

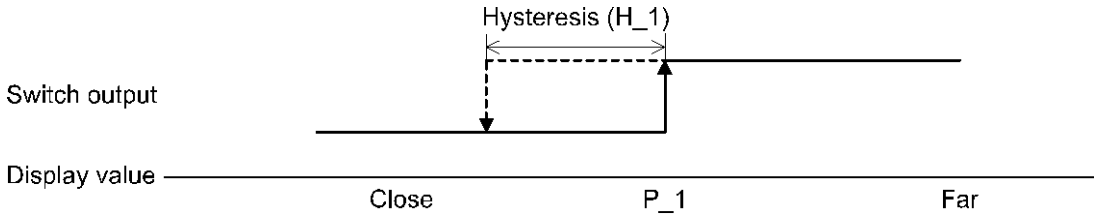

•Window comparator mode
Normal output

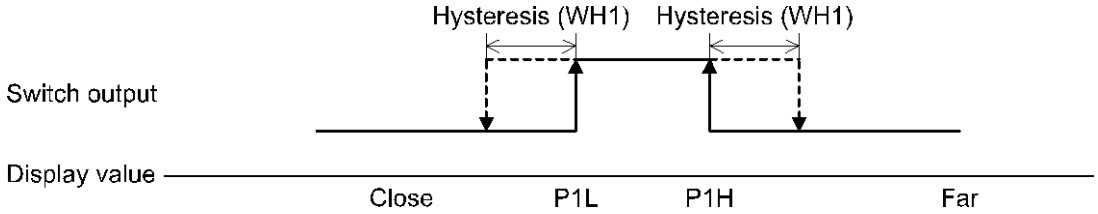

Reverse output

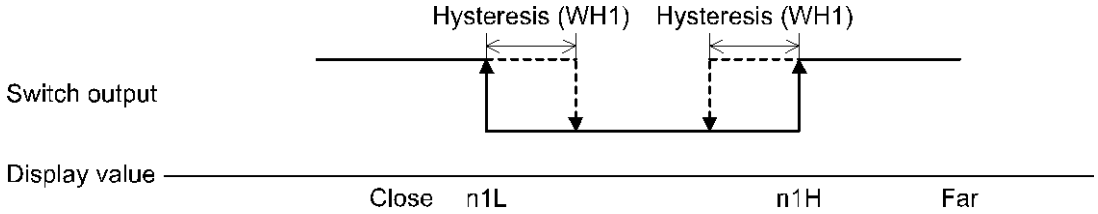

∗: When the output of OUT2 is set to "distance detection", a similar operation is available.

■Default settings of OUT2

The default setting is as shown below. It is possible to adjust the pressure setting.
(Output mode: OUT port window comparator mode, Setting of reverse output: normal output)

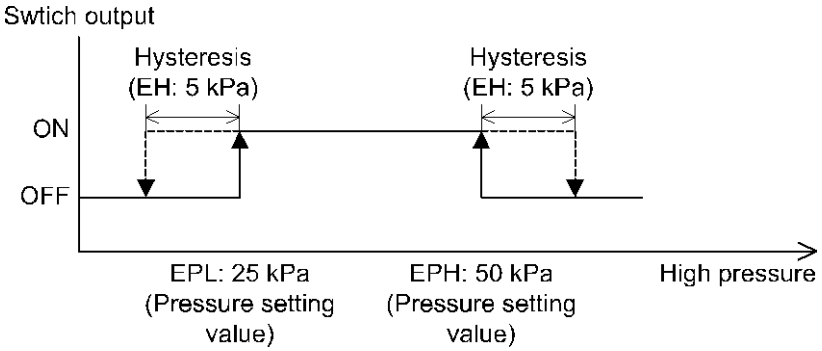

3 Step Setting Mode

■3 step setting mode

In this mode, the set values can be input in just 3 steps.
Use this mode if the product is to be used straight away, after changing only the set values.
(Main display shows the switch output mode (ON/OFF))

■Preparation before setting

(1) Supply pressure to the product. (100 to 200 kPa)

(2) Insert a acceptable clearance gauge between the detection surface and the workpiece.
Alternatively, place a sample workpiece (non-defective workpiece) on the detection nozzle.

<Operation>
[3 step setting mode (hysteresis mode)]
In the 3 step setting mode, the set value (P_1 or n_1) and hysteresis (H_1) can be changed. Set the items on the sub display (set value or hysteresis) with the UP or DOWN button. When changing the set value, follow the operation below. The hysteresis setting can be changed in the same way.

(1) Press the SET button once when the item to be changed is displayed on the sub display.
The set value on the sub display (right) will start flashing.

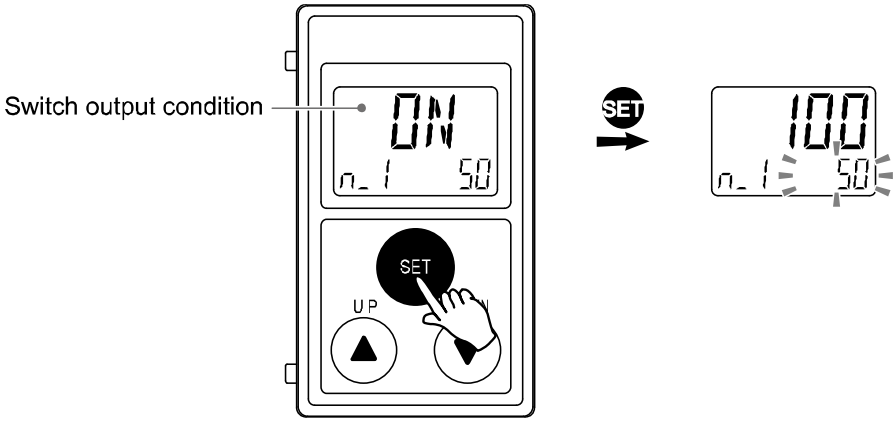

(2) Press the UP or DOWN button to change the set value.
The set value can be increased with the UP button and can be reduced with the DOWN button.

●Press the UP button once to increase the value by one digit, press and hold to continuously increase.

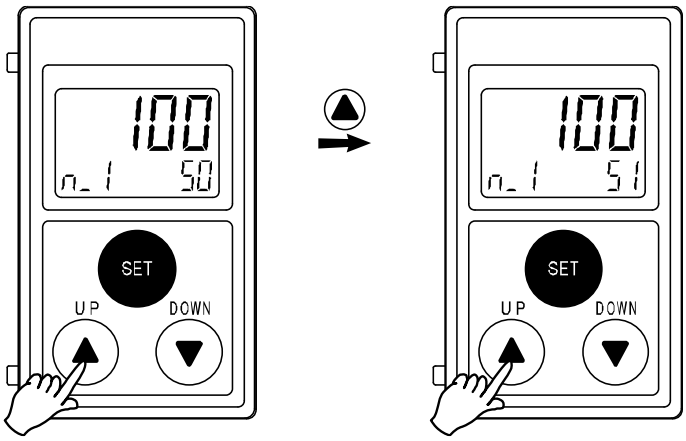

●Press the DOWN button once to reduce the value by one digit, press and hold to continuously reduce.

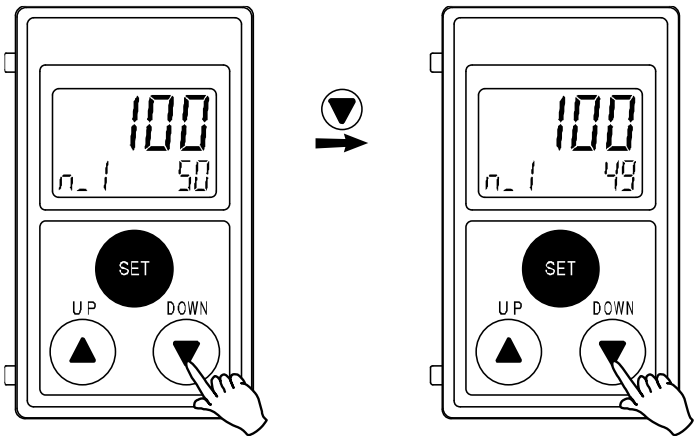

●When the UP and DOWN buttons are pressed simultaneously for 1 second or longer, the set value is displayed as [- - -] and the set value will be the same as the displayed value automatically (snap shot function (Refer to page 86)). Afterwards, it is possible to adjust the value by pressing the UP or DOWN button.

(3) Press the SET button to complete the setting.

In window comparator mode, the switch operates within the set range (from P1L to P1H).
Set P1L, the lower limit of the switch operation, and P1H, the upper limit of the switch operation and WH1 (hysteresis) following the instructions given on page 48.
(When reversed output is selected, the sub display (left) shows [n1L] and [n1H].)
Please refer to the "List of output modes" on page 60 for the relationship between the set values and operation.

*: Set OUT2 in the same way.
Setting of the normal/reverse output switching and hysteresis/window comparator mode switching are performed with the function selection mode [F 1] OUT1 setting and [F 2] OUT2 setting.

Simple Setting Mode

■Simple setting mode

<Operation>

[Simple setting mode (hysteresis mode)

In simple setting mode, the set value, hysteresis and delay time can be changed while the current value is displayed (main display).

(1) Press and hold the SET button between 1 and 3 seconds in measurement mode. [SEt] is displayed on the main display. When the button is released while in the [SEt] display, the current pressure value is displayed on the main display, [P_1] or [n_1] is displayed on the sub display (left) and the set value (flashing) is displayed on the sub display (right).

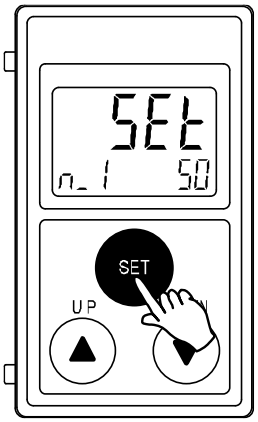

(2) Change the set value with the UP or DOWN button, and press the SET button to set the value. Then, the setting moves to hysteresis setting. (The snap shot function can be used. (Refer to page 86))

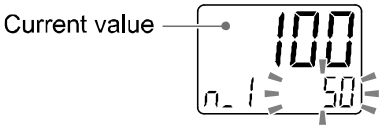

(3) Press the UP or DOWN button to change the set value.
(The snap shot function can be used. (Refer to page 86))

(4) Press the SET button for less than 2 seconds to complete the OUT1 setting.
OUT2 setting is displayed on the sub display. Continue with the setting the OUT2.
Press and hold the SET button for 2 seconds or longer to complete the setting. The product will return to measurement mode.

∗1: Selected items (1) to (3) become valid after pressing the SET button.

∗2: After enabling the setting by pressing the SET button, it is possible to return to measurement mode by pressing the SET button for 2 seconds or longer.

∗3: When the output mode of OUT 2 (refer to page 55) is set to error output or output OFF, the simple setting mode cannot be used.

In the window comparator mode, set P1L, the lower limit of the switch operation, and P1H, the upper limit of the switch operation and WH1 (hysteresis) following the instructions given on page 50.
(When reversed output is selected, the sub display (left) shows [n1L] and [n1H].)
Please refer to the "List of output modes" on page 60 for the relationship between the set values and operation.

∗: Set OUT2 in the same way. When pressure detection is selected in OUT2, it is possible to set the delay time.

Function Selection Mode

■Function selection mode

In measurement mode, press the SET button between 3 and 5 seconds, to display [F 0]. Select to display the function to be changed [F□□]. Press and hold the SET button for 2 seconds or longer in function selection mode to return to measurement mode.

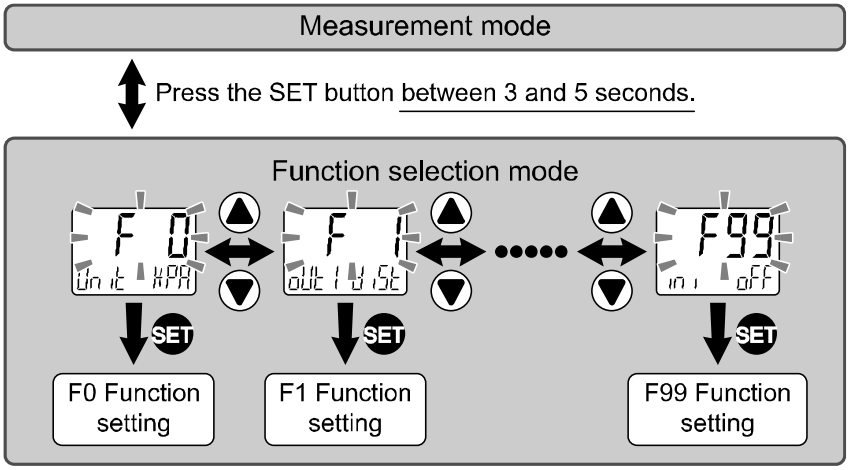

∗: Some products do not have all the functions. If no function is available or selected due to configuration of other functions, [- - -] is displayed on the sub display (right).

■Table of default settings

The default setting is as follows.
If no problem is caused by this setting, keep these settings.
To change a setting, enter function selection mode.

Function number	Function	Label	Default Settings
F0	Unit selection	Unit	[kPa]
	Switch output specifications	NorP	[PnP]
F1	Output item	oUt1	[diSt] Gap distance setting
	Output mode	ModE	[HYS] Hysteresis mode
	Reversed output	1ot	[1_n] Reversed output
	Switch point	n_1	ISA3-F: [20], ISA3-G: [50], ISA3-H[50]
	Hysteresis	H_1	ISA3-F: [3], ISA3-G: [20], ISA3-H[20]
	Display colour	CoL	[1SoG] Green when ON, Orange when OFF (Linked to OUT1)
F2	Output item	oUt2	[E_Pr] OUT port pressure detection
	Output mode	ModE	[Wind] Window comparator mode
	Reversed output	2ot	[2_P] Normal output
	Pressure setting	EP2L	[25.0] kPa
		EP2H	[50.0] kPa
	Hysteresis	EH2	[5.0] kPa
	Response time	EdH2	[1.00] s
		EdL2	[1.00] s
	Display colour	CoL	[1SoG] Green when ON, Orange when OFF (Linked to OUT1)
F6	Display value compensation	FSCd	[0.0] Compensation value: 0.0
F10	Sub display setting	SUb	[Std] Standard
F14	Zero cut-off setting	Cut	ISA3-F: [0.0]%, ISA3-G: [6.0]%, ISA3-H: [10.0] %
F80	Display off mode setting	diSP	[on] Normal operation mode
F81	Security code selection under key lock mode	Pin	[oFF] OFF
F90	Set all functions	ALL	[oFF] Set all functions OFF
F95	Calibration	CAL	[oFF] Not calibrated
F98	Forced output	tESt	[n] No forced output
F99	Reset to default settings	ini	[oFF] Not reset

■[F 0] Selection of the display unit and switch output specifications

This setting is only available for models with the units selection function.

<Operation>

Press the UP or DOWN button in function selection mode to display [F 0].

Press the SET button. ⬇ Move on to display unit setting.

Display unit setting

Press the UP or DOWN button to select the display unit.

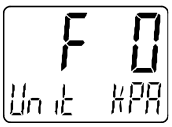

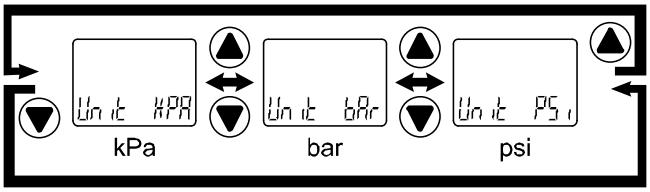

∗: kPa can be selected if the product does not have the unit selection function.

Press the SET button to set. ⬇ Move on to the switch output NPN/PNP specification switching setting.

Switching setting of switch output NPN/PNP specifications

The switch output of this product can be switched to NPN or PNP output in accordance with the user device construction.

Press the UP or DOWN button to select switch output specification.

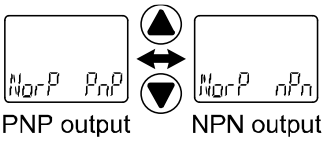

Press the SET button to set. ⬇ Return to function selection mode.

[F 0] Selection of the display unit and switch output specifications is completed

●Available display unit and minimum set value

Unit	Min. set value
kPa	0.1
bar	0.001
psi	0.01

■[F 1] Setting of OUT1

The setting of output OUT1 can be performed.
Please refer to page 46 for the relationship between the set items and operation.

<Operation>

Press the UP or SET button in function selection mode to display [F 1].

Press the SET button. ⬇ Move on to output setting.

Output setting

In OUT1, items other than the distance detection cannot be selected.

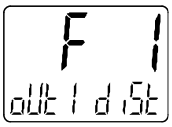

Press the SET button. ⬇ Move on to output mode setting.

Output mode setting

Press the UP or DOWN button to select the required output mode.

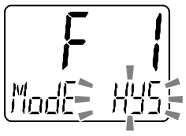

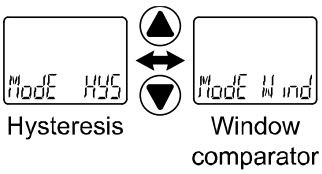

Press the SET button to set. ⬇ Move on to reversed output setting.

Reversed output setting

Press the UP or DOWN button to select the reversed output.

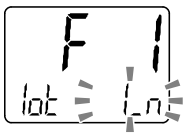

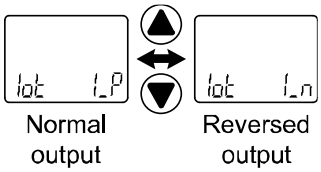

Press the SET button to set. ⬇ Move on to switch point (distance) setting.

Switch point (distance) setting

Set the switch point based on the setting method on page 48.

Hysteresis mode: [P_1]
Window comparator mode: [P1L] [P1H]
"P" is changed to "n" as [P_1] → [n_1] when reversed output is selected.
The snap shot function can be used. (Refer to page 86)

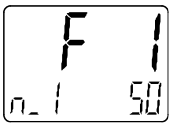

Press the SET button to set. ↓ Move on to hysteresis setting.

Hysteresis setting

Set the pressure referring to the setting method on page 48.

Hysteresis mode: [H_1]
Window comparator mode: [WH1]
The snap shot function can be used. (Refer to page 86)

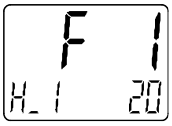

Press the SET button to set. ↓ Move on to display colour setting.

Display colour setting

Press the UP or DOWN button to select the display colour.

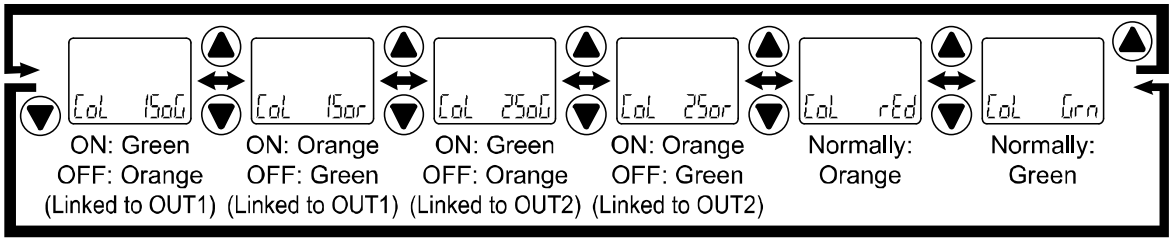

Press the SET button to set. ↓ Return to function selection mode.

[F 1] Setting of OUT1 completed

∗1: Selected item becomes valid after pressing the SET button.
∗2: After enabling the setting by pressing the SET button, it is possible to return to the measurement mode by keeping pressing the SET button for 2 seconds or longer.

■[F 2] Setting of OUT2

The setting of Output OUT2 can be performed.
Pressure detection on the OUT port or pressure detection or distance detection on the SUP port can be set.
Please refer to the "List of output modes" on page 60 for the relationship between the set items and operation.

<Operation>

Press the UP or DOWN button in function selection mode to display [F 2].

Press the SET button. ↓ Move on to output setting.

Output setting

Press the UP or DOWN button to select the desired output mode.

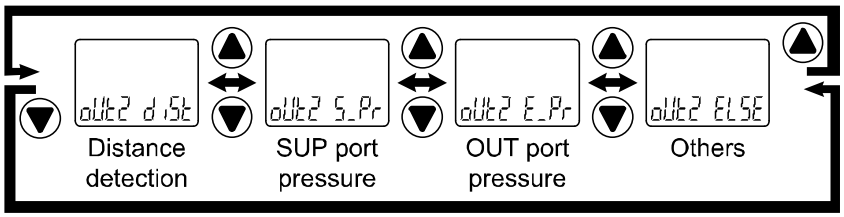

Press the SET button to set. ↓ Move on to output mode setting.

Output mode setting

Press the UP or DOWN button to select the required output mode.

•When distance detection, SUP port side pressure or OUT port side pressure is selected

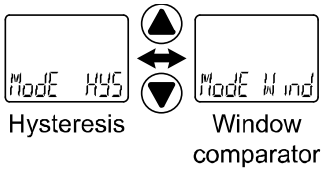

•When other items are selected

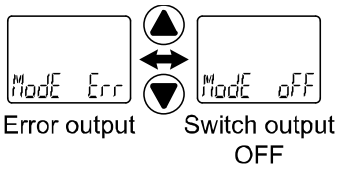

Press the SET button to set. ↓ Move on to reversed output setting.

[OFF] Switch output OFF is selected
Press the SET button to move on to display colour setting.

Reversed output setting

Press the UP or DOWN button to select the reversed output.

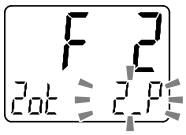

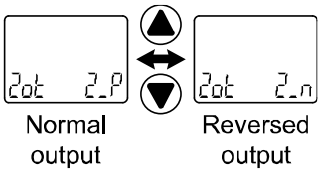

Press the SET button to set. Move on to switch point (distance/pressure) setting.

[Err] Error output is selected
Press the SET button to move on to display colour setting.

Switch point (distance/pressure) setting

Set the switch point based on the setting method on page 48.

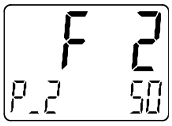

Hysteresis mode: [P_2][EP_2][SP_2]
Window comparator mode: [P2L][P2H][EP2L]
[EP2H][SP2L][SP2H]
"P" is changed to "n" as [P_2] → [n_2] when reversed output is selected.
The snap shot function can be used. (Refer to page 86)

Press the SET button to set. Move on to hysteresis setting.

Hysteresis setting

Set the pressure referring to the setting method on page 48.

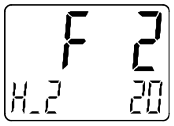

Hysteresis mode: [H_2][EH_2][SH_2]
Window comparator mode: [WH2][EH2][SH2]
The snap shot function can be used. (Refer to page 86)

Press the SET button to set. Move on to delay time setting.

[diSt] Distance detection is selected
Press the SET button to move on to display colour setting.

Delay time setting

Set the delay time referring to the setting method on page 50.

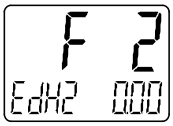

Delay time setting at ON

When OUT port side pressure is selected: [EdH2]
When SUP port side pressure is selected: [SdH2]

Delay time setting at OFF

When OUT port side pressure is selected: [EdL2]
When SUP port side pressure is selected: [SdL2]

Press the SET button to set. Move on to display colour setting.

Display colour setting

Press the UP or DOWN button to select the display colour.

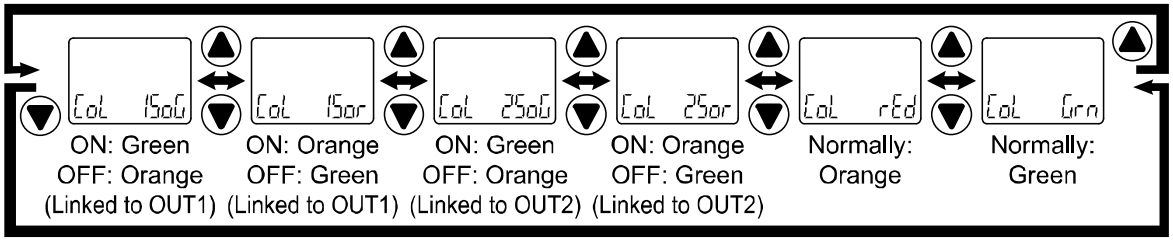

Press the SET button to set. Return to function selection mode.

[F 2] Setting of OUT2 completed

∗1: Selected item becomes valid after pressing the SET button.
∗2: After enabling the setting by pressing the SET button, it is possible to return to the measurement mode by keeping pressing the SET button for 2 seconds or longer.

○**List of output modes**

•OUT port pressure detection

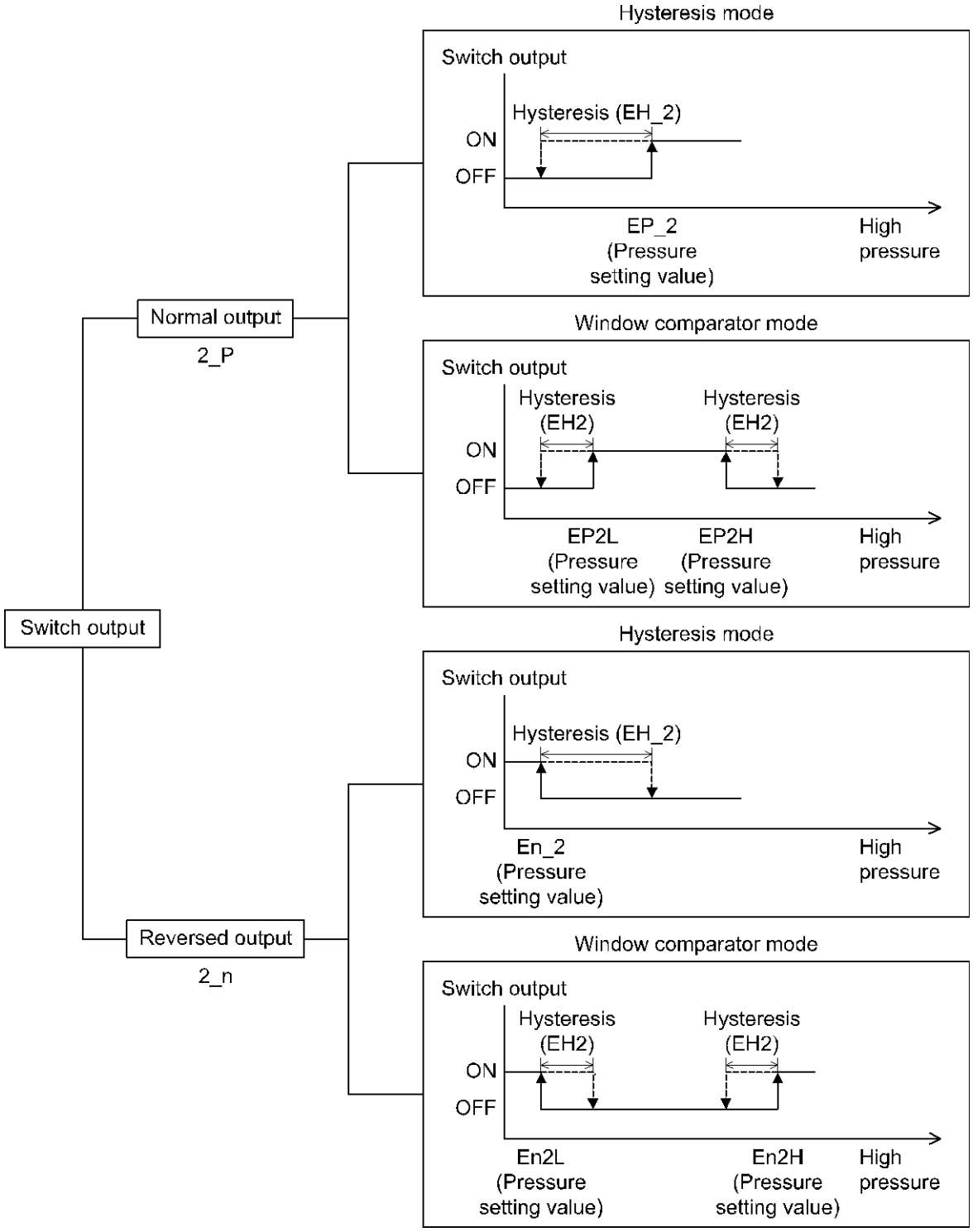

If the set value when the switch output is changed is outside the set pressure range due to switching between normal and reversed output, the hysteresis will automatically be compensated.

•SUP port pressure detection

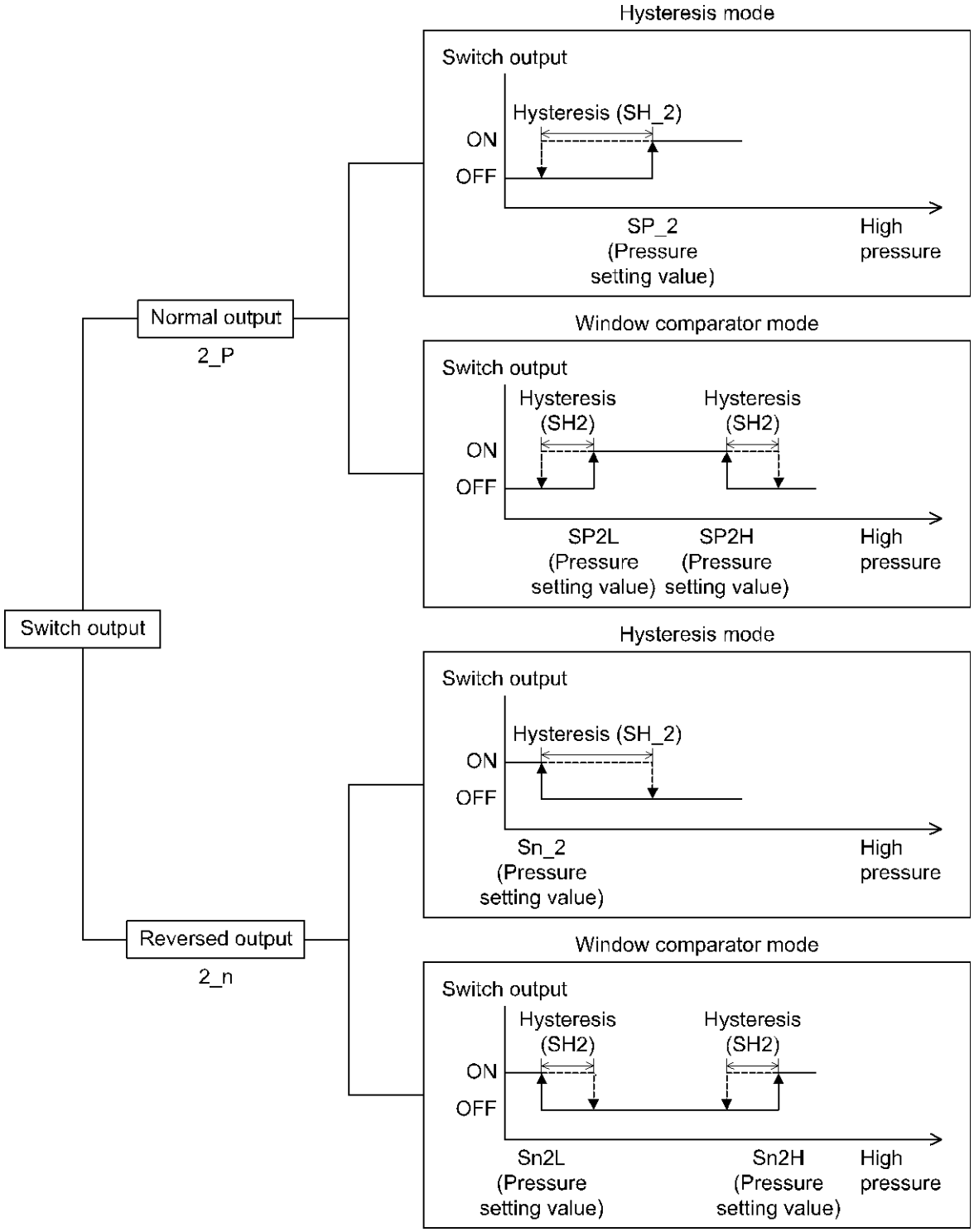

If the set value when the switch output is changed is outside the set pressure range due to switching between normal and reversed output, the hysteresis will automatically be compensated.

•For distance detection

Same as the setting of switch point and hysteresis of OUT1.

•When other output is selected

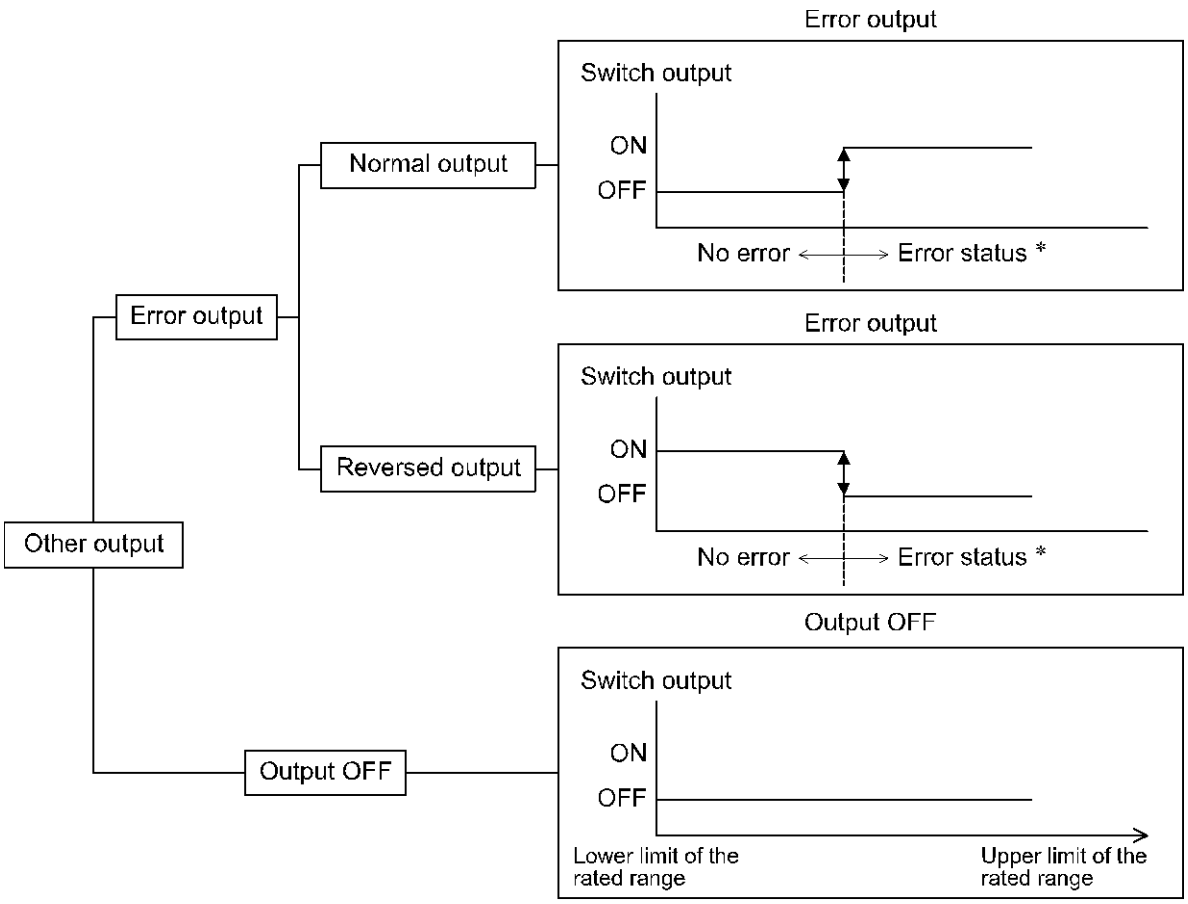

∗: Target errors will be Er1 and 2, Er5 and 6, Er8 and 9, Er15, Er3 and Er40.
If overcurrent is generated, the switch output will be forcibly turned OFF.

■[F 6] Display value compensation

The display value is finely adjusted by hand.
Pressure can be adjusted in the following range of ±20%R.D.

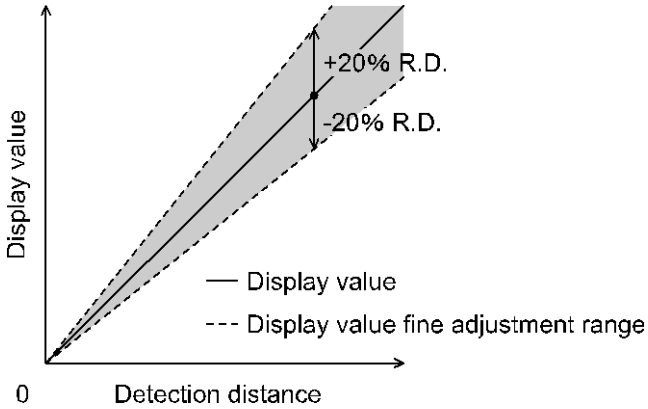

<Operation>

Press the UP or DOWN button in function selection mode to display [F 6].

Press the SET button. ⬇ Move on to fine adjustment of display value.

Fine adjustment of display value

Press the UP or DOWN button to change adjustment rate.

When the adjustment rate is changed, the display value after adjustment is displayed on the main display.

Display value after adjustment

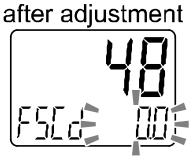

Adjustment rate

Press the SET button to set. ⬇ Return to function selection mode.

[F 6] Fine adjustment of display value completed

■[F10] Sub display setting

Change the display style of the sub display.
Detailed contents are shown in the pages from 65.

<Operation>

Press the UP or DOWN button in function selection mode to display [F10].

Press the SET button. ↓ Move on to sub display setting.

Sub display setting

Press the UP or DOWN button to select the display style for the sub display.

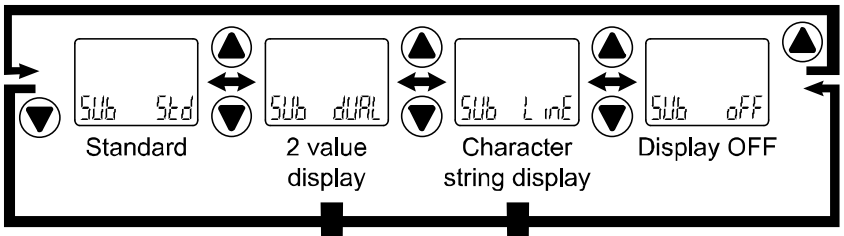

[dUAL] 2 value display is selected
Press the SET button to move on to sub display (left) setting.

[LinE] Character string display is selected
Press the SET button to move on to the sub display setting.

[Std] Standard, [oFF] Display OFF are selected
Press the SET button to set.

Return to function selection mode.

Sub display (left) setting

Set the sub display (left) from the selection list on page 66.

Press the SET button to set. ↓ Move to sub display (right) setting.

Sub display (right) setting

Set the sub display (right) from the selection list on page 66.

Press the SET button to set. Return to function selection mode.

Input of line name

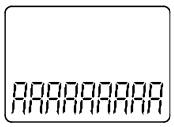

Press the UP or DOWN button to input the line name to the sub display.
Press the SET button to make the next digit to the right flash. Input the line name.
(The most significant digit flashes when the SET button is pressed at the least significant digit.)

The order of displayed characters is A → b → • • • → Y → (Z) → 0 → 1 → • • • → 9 → symbol → space.
(The displayable letters are different between the left 1, 6 and 7 digit and 2 to 5, 8 and 9 digit.)
Pressing the UP and DOWN button simultaneously adds/deletes the dot (decimal point).

The set line name flashes by pressing the SET button for 1 second or longer.
(At this point, the setting of the line name is not complete.)

Press the SET button to set. ↓ Return to function selection mode.

[F10] Sub display setting completed

<Sub display>

•Standard

The Standard display function displays the items and values on the sub display.
The displayed item varies depending on the setting of the output mode. Select the displayed items by pressing the UP or DOWN button in measurement mode.

(Hysteresis mode, error output, switch output off)

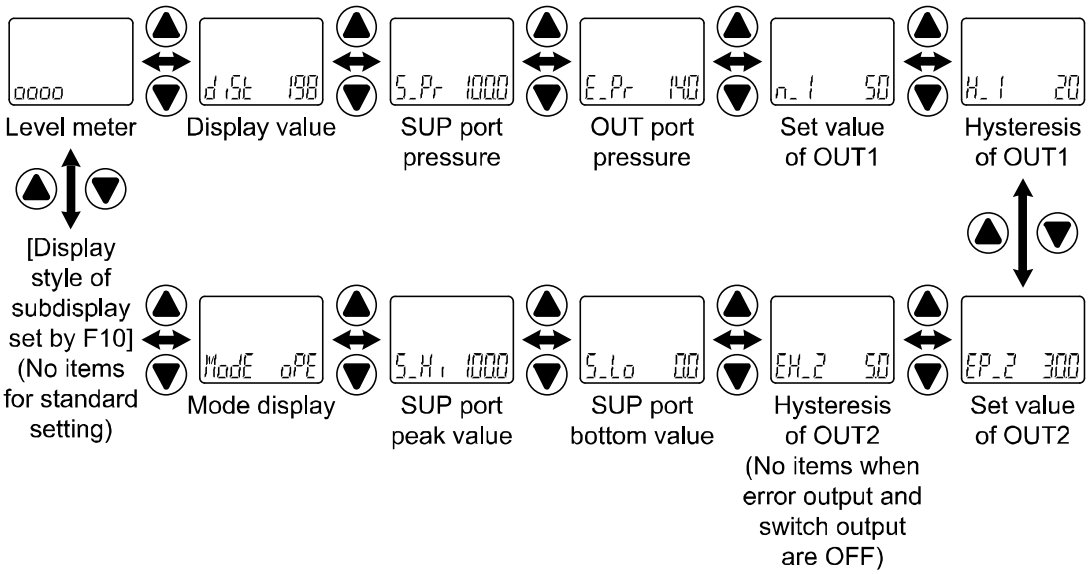

(Window comparator mode)

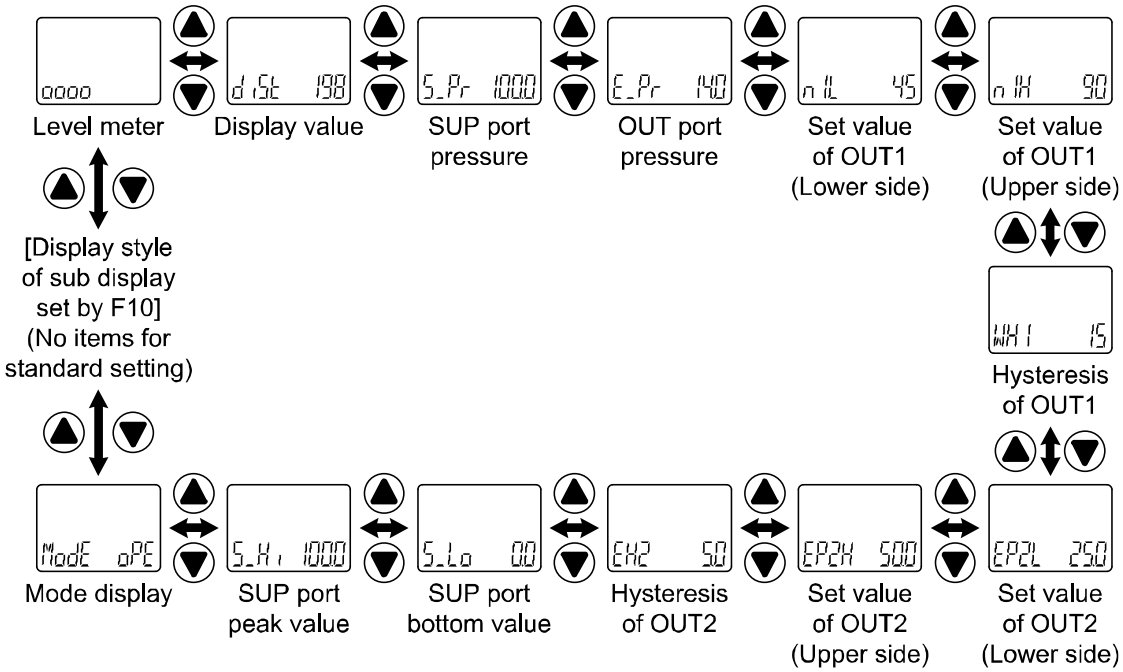

•2 value display

The 2 value display function displays the items listed below on the right and left side of the sub display.

List of items for selection

Item	Details	Sub display		Remarks
		Left side	Left side	
dist	Detection distance (guideline)	○	○	
S_Pr	SUP port pressure	○	○	
S_Hi	SUP port pressure peak value	○	×	
S_Lo	SUP port pressure bottom value	×	○	
E_Pr	OUT port pressure	○	○	
P_1(n_1)	Set value for OUT1 hysteresis mode	●	○	When hysteresis mode is selected
H_1	OUT1 hysteresis mode	○	●	When hysteresis mode is selected
P1L(n1L)	OUT1 Window comparator mode set value (Lower side)	○	○	When window comparator mode is selected
P1H(n1H)	OUT1 Window comparator mode set value (Upper side)	○	○	When window comparator mode is selected
WH1	OUT1 window comparator mode	○	○	When window comparator mode is selected
P_2(n_2) EP_2(En_2) SP_2(Sn_2)	Set value for OUT2 hysteresis mode	○	○	When hysteresis mode is selected
H_2 EH_2 SH_2	OUT2 hysteresis mode	○	○	When hysteresis mode is selected
P2L(n2L) EP2L(En2L) SP2L(Sn2L)	OUT2 Window comparator mode set value (Lower side)	○	○	When window comparator mode is selected
P2H(n2H) EP2H(En2H) SP2H(Sn2H)	OUT2 Window comparator mode set value (Upper side)	○	○	When window comparator mode is selected
WH2 EH2 SH2	OUT1 window comparator mode	○	○	When window comparator mode is selected
Unit	Pressure display unit	○	○	
Md1	OUT1 output mode/output style	○	×	
Md2	OUT2 output mode/output style	×	○	
out	NPN/PNP output set value	○	○	
Line	String of random characters	○	○	
off	Display OFF	○	○	

●: Default settings

Table showing the output mode and output form when Md1 and Md2 are selected.

Output mode	Output style	Display style
Hysteresis mode	Normal output	
	Reversed output	
Window comparator mode	Normal output	
	Reversed output	
Error output	Normal/Reversed output	EoUt
Switch output off	—	oFF

When using the 2 value display function, 3 step setting is not available for the display.
(When setting 3 step, select each set value to be displayed by pressing the UP or DOWN button.)

When output operation mode is changed after selecting the 2 value display, the selected display items will not be applicable and [- - -] will be displayed. In this case, select items for the 2 value display setting again.

•Level bar display

It is possible to visually display the current detection distance (clearance guideline) on the sub display.

∗: The level bar is not displayed for the pressure value on the SUP port side and OUT port side.

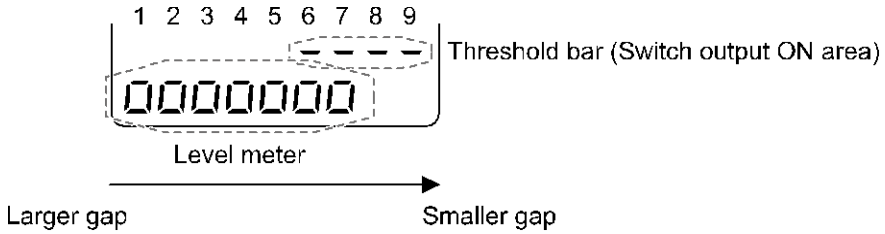

9 level display

The switch point value bar is only displayed in hysteresis mode.
In window comparator mode, error output and switch output off setting, the switch point value bar will not be displayed. Only the level meter is displayed.

Boundary value of the switch point value bar and level bar

In hysteresis mode

Hysteresis mode varies depending on the switch point.

Relationship between boundary value and display value of the level bar/switch point value bar and process data

	Distance type	Level 1	Level 2 *	Level 3	Level 4	Level 4
Display value	ISA-F	Constantly ON	60 or less (60 to 36)	X+30 (35 to 31)	X+25 (30 to 26)	X+20 (25 to 21)
	ISA3-G		300 or less (300 to 176)	X+150 (175 to 151)	X+125 (150 to 126)	X+100 (125 to 101)
	ISA3-H		500 or less (500 to 351)	X+300 (350 to 301)	X+250 (300 to 251)	X+200 (250 to 201)
Process data	ISA3-F ISA3-G		3000 or less (3000 to 1751)	X+1500 (1750 to 1501)	X+1250 (1500 to 1251)	X+1000 (1250 to 1001)
	ISA3-H		2500 or less (2500 to 1751)			

	Distance type	Level 6	Level 7	Level 8	Level 9	Weight
Display value	ISA-F	X+15 (20 to 16)	X+10 (15 to 11)	X+5 (10 to 6)	X (5 to 0)	5
	ISA3-G	X+75 (100 to 76)	X+50 (75 to 51)	X+25 (50 to 26)	X (25 to 0)	25
	ISA3-H	X+150 (200 to 151)	X+100 (150 to 101)	X+50 (100 to 51)	X (50 to 0)	50
Process data	ISA3-F ISA3-G	X+750 (1000 to 751)	X+500 (750 to 501)	X+250 (500 to 251)	X (250 to 0)	250
	ISA3-H					

∗: The value in the brackets in level 2 shows the boundary value.

X: Switch point is divided by weight. If the switch point is divisible, the weight will be X.
Example) When the switch point of the display value = 50 with ISA3-G
This is divisible by weight, so X = 25.
When the switch point of the display value = 75 with ISA3-H
The weight is 50, so X = 25.

<u>In window comparator mode, error output, switch output off</u>
The boundary value is fixed.

Relationship between level bar, display value and process data

	Distance type	Level 1	Level 2	Level 3	Level 4	Level 5
Display value	ISA3-F	Constantly ON	60 or less	Below 35	Below 30	Below 25
	ISA3-G		300 or less	Below 175	Below 150	Below 125
	ISA3-H		500 or less	Below 350	Below 300	Below 250
Process data	ISA3-F ISA3-G		3000 or less	Below 1750	Below 1500	Below 1250
	ISA3-H		2500 or less			

	Distance type	Level 6	Level 7	Level 8	Level 9
Display value	ISA3-F	Below 20	Below 15	Below 10	Below 5
	ISA3-G	Below 100	Below 75	Below 50	Below 25
	ISA3-H	Below 200	Below 150	Below 100	Below 50
Process data	ISA3-F ISA3-G	Below 1000	Below 750	Below 500	Below 250
	ISA3-H				

•Character string display

•Function to display the specified character string on the sub display.
When line name is input, characters which can be displayed for each digit are as follows.

(Left 2 to 5, 8 and 9 digit display pattern)
Characters Q, X, Z, /, or ∗ cannot be displayed.

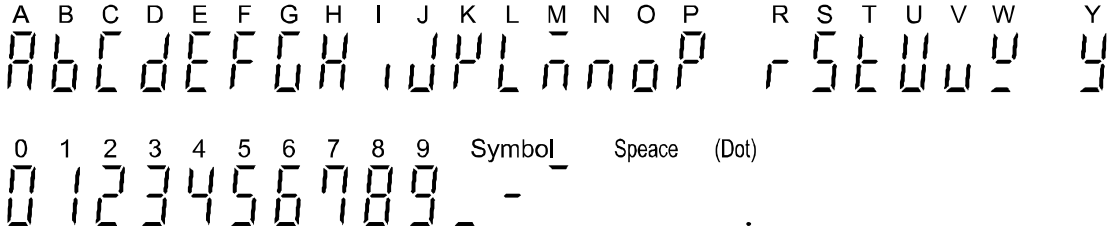

(Left 1, 6 and 7 digit display pattern)
Characters A to Z can be displayed (the same as the 3 digits on the right).

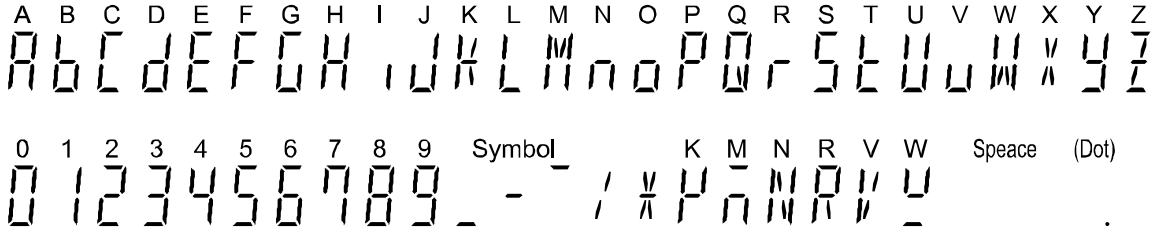

•Display OFF

The Sub display is not displayed.

■[F14] Zero cut-off setting

When the detection distance (guideline) is close to zero, the product rounds the value down and zero will be displayed.
The zero cut-off range is 0.0 to 10.0% F.S., and can be set in 1.0% F.S. increments.

<Operation>

Press the UP or DOWN button in function selection mode to display [F14].

Press the SET button. ⬇ Move on to select zero cut-off setting.

Select zero cut-off setting

Press the UP or DOWN button to select the value of zero cut-off.

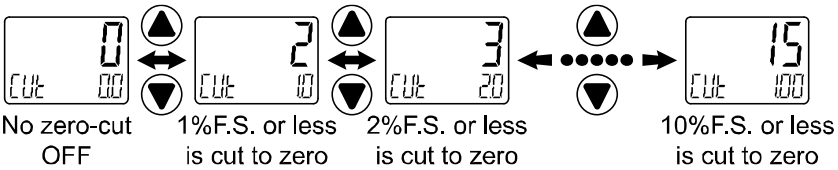

∗: The above figure shows the case when ISA3-G is selected.
∗: When the actual value is smaller than the displayed value in the upper line, zero will be displayed.

When OUT1 and OUT2 are used with the detection distance and the hysteresis range within the zero cut-off range, the movement will be as follows.
Setting example: P_1 = 15, H_1 = 10, zero-cut 6%

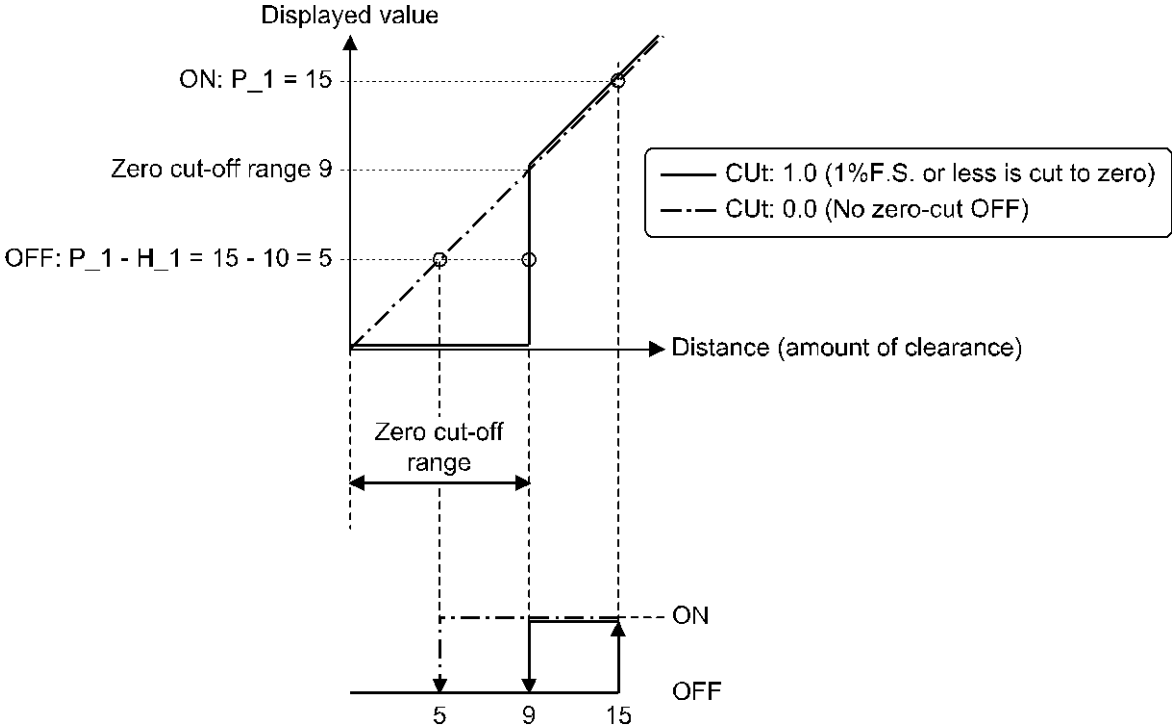

Press the SET button to set. ⬇ Return to function selection mode.

[F14] Zero cut-off setting completed

■[F80] Set display OFF mode

Display OFF mode can be selected.
When selected and no buttons are pressed for 30 seconds, the pressure switch will shift to display OFF mode.

<Operation>

Press the UP or DOWN button in function selection mode to display [F80].

Press the SET button. ⬇ Move on to display OFF mode setting.

Display OFF mode setting

Press the UP or DOWN button to select the display OFF mode.

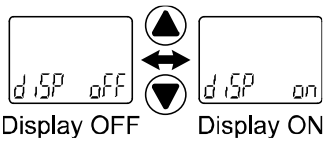

Press the SET button to set. ⬇ Return to function selection mode.

[F80] Setting of display OFF mode is completed

With the display OFF mode, when a key operation is performed, normal operation is available.
When a key operation is not performed for 30 seconds, the display will return to the display OFF mode (Power saving is enabled in measurement mode only).

During display OFF mode, sub screen display [- - -] will flash and indicator light (only when the switch is ON), Lock indicator, IO-Link indicator will turn ON for display.

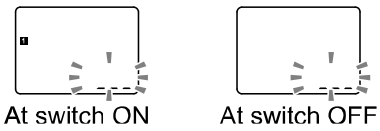

■[F81] Security code

The security code can be turned on or off and the security code can be changed when unlocked.

<Operation>

Press the UP or DOWN button in function selection mode to display [F81].

Press the SET button. ⬇ Move on to security code.

Security code

Press the UP or DOWN button to select the setting of security code.

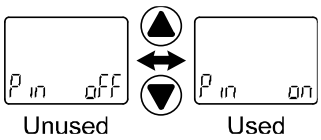

[oFF] (Unused) is selected
Press the SET button to return to function selection mode.

Press the SET button to set. ⬇ Move on to security code checking.

Security code checking

Press the UP or DOWN button to input the security code on the sub display (right).
(The default setting is [000].) *

For instructions on how to enter the security code, refer to "How to input and change the security code" on page 90.

If the security code entered is incorrect, [FAL] will be displayed, and the security code must be entered again.
If the wrong security code is entered 3 times, [nG] is displayed and the device returns to function selection mode.

Press the SET button for 1 second to set. ⬇ Move on to security code changing.

Security code changing

Press the UP or DOWN button to input the changed security code on the main display. *
For instructions on how to enter the security code, refer to "How to input and change the security code" on page 90.

After entry, the changed security code will flash by pressing the SET button for 1 second.
(At this point, the changing of the security code is not completed)
Return to the change of setting again by pressing the UP or DOWN button.

Press the SET button to set. Return to function selection mode.

[F81] Security code completed

If the security code function is enabled, it is will be necessary to input a security code to release the key-lock.

*: If a key is not pressed for 30 seconds while entering the security code, function selection mode will return.

●Special function setting

■[F90] Setting of all functions

All functions can be set in turn.

<Operation>

Press the UP or DOWN button in function selection mode to display [F90].

Press the SET button. ⬇ Move on to setting of all functions.

Setting of all functions

Press the UP or DOWN button to select all functions.

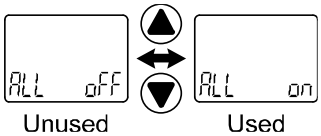

Unused Used

[oFF] (Unused) is selected
Press the SET button to set.

Return to function selection mode.

[on] (Used) is selected

Setting of functions *

Return to [oFF] (Unused), then press the SET button to set.

Return to function selection mode.

[F90] Setting of all functions completed

*: Setting of each function
Every time the SET button is pressed, the display moves to the next function in order of "Setting of each function" on page 76.
Set by using the UP and DOWN buttons.
For details of how to set each function, refer to the relevant setting of function section in this manual.

*: Measurement mode can be returned from any setting items by pressing and holding the SET button for 2 seconds or longer.

*: The function setting from before returning to the measurement mode is maintained.

●Setting of each function

Order	Function
1	Display unit selection
2	Switching setting of switch output NPN/PNP specifications
3	Set OUT1 output type
4	Output mode setting of OUT1
5	Reversed output setting of OUT1
6	Set OUT1 switch point
7	Hysteresis setting of OUT1
8	Display colour setting
9	Set OUT2 output type
10	Output mode setting of OUT2
11	Reversed output setting of OUT2
12	Set OUT2 switch point
13	Hysteresis setting of OUT2
14	Set OUT2 delay time at ON (When pressure is the target of output)
15	Set OUT2 delay time at OFF (When pressure is the target of output)
16	Display colour setting
17	Display value compensation
18	Sub display setting
19	Zero cut-off setting
20	Set display OFF mode
21	Security code

∗: Measurement mode can return from any setting item by pressing the SET button for 2 seconds or longer.

∗: Function set before returning to the measurement mode is maintained.

■[F95] calibration function

This function adjusts each display value (detection distance (guideline), SUP port pressure and OUT port pressure.
It adjusts the display value on the supply pressure side and detection pressure side, and corrects the display value.
It performs zero-clear of the display pressure, and subtle adjustment of the display value and detection distance (guideline).
It is possible to adjust the display pressure zero when zero-clear is applied to the pressure display (no air is supplied: released to atmosphere).

<Operation>

Press the UP or DOWN button in function selection mode to display [F95].

Press the SET button. ↓ Move on to calibration function setting.

Calibration function setting

Press the UP or DOWN button to select calibrate or not calibrate.

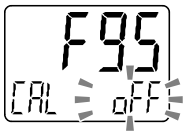

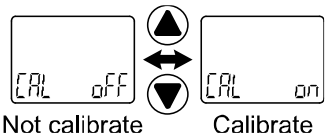

[oFF] (Unused) is selected
Press the SET button to return to function selection mode.

Press the SET button to set. ↓ Move on to zero-clear of pressure display.

Step1: Zero-clear of pressure display

Release the SUP port side pressure and OUT port side pressure to atmosphere.
Press the SET button to conduct zero-clear.

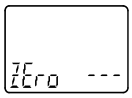

∗: If the measured pressure is outside of the default value by ±7% FS or more, ER3 is displayed. Return to the zero-clear setting.
∗: If the mode is switched to the calibration mode by mistake, press the UP and DOWN buttons for more than 1 second. The screen will move back to the calibration selection mode.

Press the SET button to set. ↓ Move on to subtle adjustment of the OUT port side pressure display value.

Step2: Subtle adjustment of the pressure display value

Pressure display after adjustment

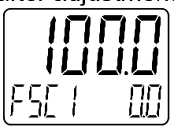

Adjustment rate

Ensure that the pressure on the SUP port side and OUT port side are the same.

Measure the applied pressure and press the UP or DOWN button to adjust the value to be the same.

When adjustment rate is changed, the pressure value after the adjustment will be displayed on the main display.

When the current pressure is unknown, press the SET button without changing the adjustment rate while the SUP side pressure and OUT side pressure are equalized using a plug. It is possible to reduce the error between the SUP side and OUT side pressure.

∗: OUT port side pressure will be adjusted automatically.

∗: When the pressure after the adjustment is below the supply pressure lower limit (80 kPa) or exceeds the display set range upper limit (220 kPa), or when the automatic adjustment of the OUT port side pressure fails, Er30 is displayed to return to the display value adjustment.

∗: If the display value fine adjustment is not performed, press the UP and DOWN buttons for 1 second or longer.
The screen will move back to the calibration selection mode.

∗: The display value can be adjusted within ±5% R.D.

Press the SET button to set. Move on to adjustment of detection distance (guideline) display value.

Step3: Adjustment of detection distance (guideline) display value

Display value after adjustment

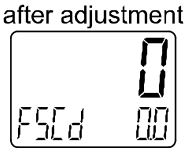

Adjustment rate

Adjust the nozzle gap to achieve applicable gap using a master work piece or shim.
Press the UP or DOWN button to change the adjustment rate.

The current detection distance is displayed on the main display.
When the adjustment rate is changed, the main display shows the value after the adjustment, so change it to the value to be changed.

∗: The display value can be adjusted within ±5% R.D.

Press the SET button to set. Return to function selection mode.

[F95] Setting of calibration function is completed

∗: When returning to measurement mode is required during the setting, press the SET button for 2 seconds or longer. Finish the calibration and return to measurement mode.

■[F98] Output check

Correct operation of the switch output can be confirmed.
The output can be turned ON/OFF manually.

<Operation>

Press the UP or DOWN button in function selection mode to display [F98].

Press the SET button. ⬇ Move on to output check.

Output check

Press the UP or DOWN button to select output check.

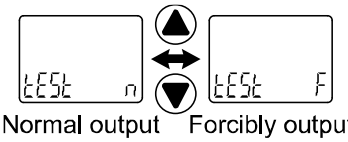

Normal output (Output not checked) | Forcibly output (Output is checked)

[n] (Normal output) is selected
Press the SET button to set.

Return to function selection mode.

Press the SET button to set. ⬇ [F] (Forced output) is selected
Press the SET button to set.

OUT1 output check

Press the UP or DOWN button to select OUT1 output check.

∗: When used with IO-Link communication, the operation indicator light and displayed colour (when OUT1 is interlocked) will change.

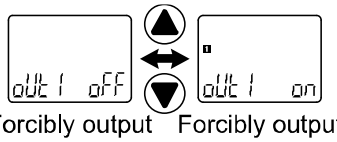

Forcibly output OFF | Forcibly output ON

Press the SET button to set. ⬇

OUT2 output check

Press the UP or DOWN button to select OUT2 output check.

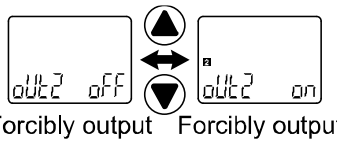

Forcibly output OFF — Forcibly output ON

In the SIO mode, when the SET button is pressed, the screen will return to the output check screen.

To finish this mode, return the output to [n] (normal output) and press the SET button. Then the mode will return to function selection mode.

In IO-Link communication mode, press the SET button to move on the next confirmation. During the IO-Link communication, it is possible to check the process data output operation.

Distance switch output 1

Press the UP or DOWN button to select forcibly output ON/OFF to check the output condition.

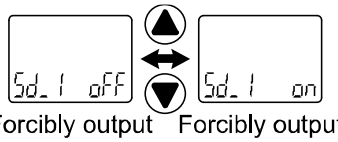

Forcibly output OFF — Forcibly output ON

∗: Bit offset: 0 in the process data will change to 0 (Forcibly output OFF)/ 1 (Forcibly output ON).

Press the SET button to set.

Distance switch output 2

Press the UP or DOWN button to select forcibly output ON/OFF to check the output condition.

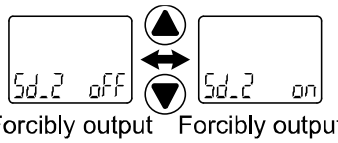

Forcibly output OFF — Forcibly output ON

∗: Bit offset: 1 in the process data will change to 0 (Forcibly output OFF)/ 1 (Forcibly output ON).

Press the SET button to set.

Pressure switch output 1 on the SUP port side

Press the UP or DOWN button to select forcibly output ON/OFF to check the output condition.

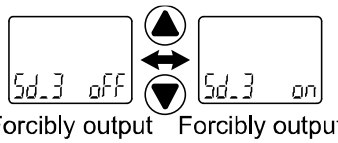

Forcibly output OFF　Forcibly output ON

∗: Bit offset: 2 in the process data will change to 0 (Forcibly output OFF)/ 1 (Forcibly output ON).

Press the SET button to set.

Pressure switch output 2 on the SUP port side

Press the UP or DOWN button to select forcibly output ON/OFF to check the output condition.

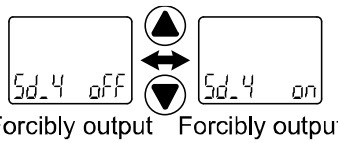

Forcibly output OFF　Forcibly output ON

∗: Bit offset: 3 in the process data will change to 0 (Forcibly output OFF)/ 1 (Forcibly output ON).

Press the SET button to set.

Pressure switch output 1 on the SUP port side

Press the UP or DOWN button to select forcibly output ON/OFF to check the output condition.

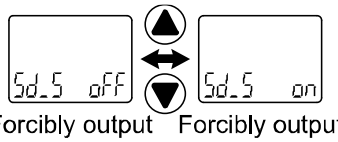

Forcibly output OFF　Forcibly output ON

∗: Bit offset: 4 in the process data will change to 0 (Forcibly output OFF)/ 1 (Forcibly output ON).

Press the SET button to set.

Pressure switch output 2 on the OUT port side

Press the UP or DOWN button to select forcibly output ON/OFF to check the output condition.

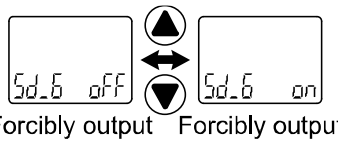

Forcibly output OFF　Forcibly output ON

∗: Bit offset: 5 in the process data will change to 0 (Forcibly output OFF)/ 1 (Forcibly output ON).

Press the SET button to set.

Pressure diagnostic output check

Press the UP or DOWN button to select forcibly output ON/OFF to check the output condition.

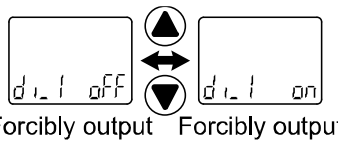

Forcibly output OFF　Forcibly output ON

∗: Bit offset: 8 in the process data will change to 0 (Forcibly output OFF)/ 1 (Forcibly output ON).

Press the SET button to set.

Error diagnostic output check

Press the UP or DOWN button to select forcibly output ON/OFF to check the output condition.

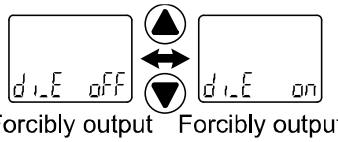

Forcibly output OFF　Forcibly output ON

∗: Bit offset: 15 in the process data will change to 0 (Forcibly output OFF)/ 1 (Forcibly output ON).

Press the SET button to set.

Process data (detection distance) value output

Press the UP or DOWN button to select forcibly output ON/OFF to check the output condition.

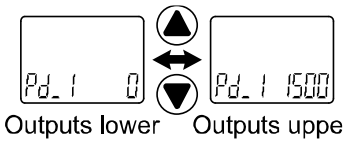

Outputs lower limit of the rated range | Outputs upper limit of the rated range

∗: Bit offset: 48 to 63 in the process data will change to 0 (Forcibly output OFF)/ 1500 (Forcibly output ON).

Press the SET button to set.

Process data (SUP port side pressure) value output

Press the UP or DOWN button to select forcibly output ON/OFF to check the output condition.

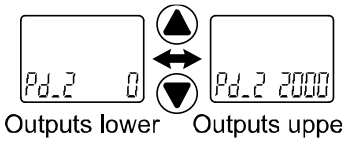

Outputs lower limit of the rated range | Outputs upper limit of the rated range

∗: Bit offset: 32 to 47 in the process data will change to 0 (Forcibly output OFF)/ 2000 (Forcibly output ON).

Press the SET button to set.

Process data (SUP port side pressure) value output

Press the UP or DOWN button to select forcibly output ON/OFF to check the output condition.

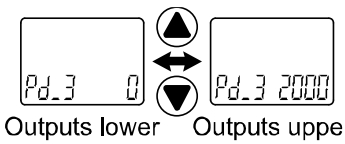

Outputs lower limit of the rated range | Outputs upper limit of the rated range

∗: Bit offset: 16 to 31 in the process data will change to 0 (Forcibly output OFF)/ 2000 (Forcibly output ON).

Press the SET button to set. Return to the output check.

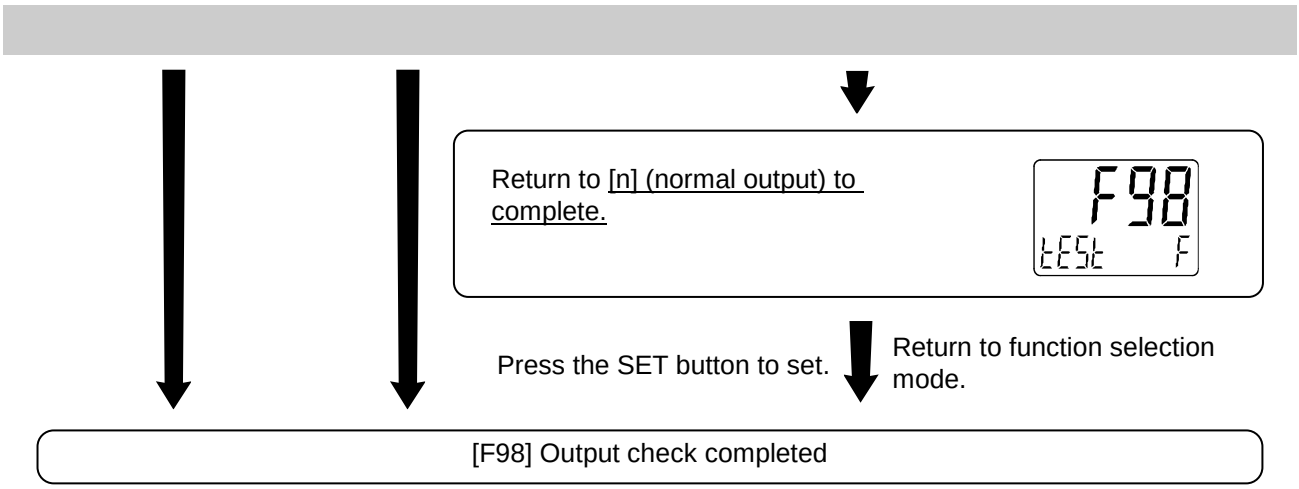
Return to [n] (normal output) to complete.
F98
tESt F
Press the SET button to set.
Return to function selection mode.
[F98] Output check completed

■[F99] Reset to default settings

If the product settings are uncertain, the default values can be restored.

<Operation>

Press the UP or DOWN button in function selection mode to display [F99].

Press the SET button. ⬇ Move on to reset to default settings.

Reset to default settings

Press the UP or DOWN button to display [ON], then press the SET and DOWN buttons simultaneously for 5 second or longer.

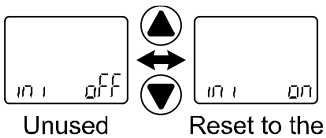

Unused

Reset to the default setting

[oFF] (Unused) is selected
Press the SET button to set.

Return to function selection mode.

All settings are returned to the default values. Return to function selection mode.

[F99] Reset to default settings completed

Other Settings

○Snap shot function

The current display value can be stored to the switch output ON/OFF set point.
When the of Sub display (left) items listed below are selected in the 3 step setting mode, Simple setting mode or Setting of each function mode ([F 1] OUT1, [F 2] OUT2 setting), by pressing the UP and DOWN buttons simultaneously for 1 second or longer, the set value of the sub display (right) shows [- - -], and the values corresponding to the current pressure values are automatically displayed.

Output mode	Configurable items	Description	Sub display (left)	Snap shot function
Hysteresis mode	Set value	Detection distance (guideline)	P_1(n_1)/P_2(n_2)	○
		Pressure on the SUP port	SP_2(Sn_2)	○
		Pressure on the OUT port	EP_2(En_2)	○
	Hysteresis	Detection distance (guideline)	H_1/H_2	○
		Pressure on the SUP port	SH_2	○
		Pressure on the OUT port	EH_2	○
Window comparator mode	Set value	Detection distance (guideline)	P1L(n1L), P1H(n1H) P2L(n2L), P2H(n2H)	○
		Pressure on the SUP port	SP2L(Sn2L), SP2H(Sn2H)	○
		Pressure on the OUT port	EP2L(En2L), EP2H(En2H)	○
	Hysteresis	Detection distance (guideline)	WH1/WH2	×
		Pressure on the SUP port	SH2	×
		Pressure on the OUT port	EH2	×

•Set value
The value is set to the same value as the display value (current displayed value).
(There is a range which cannot be set to the current displayed value depending on the hysteresis. In that case, the value is set to the closest value).

•Hysteresis
The hysteresis is calculated from the equation below and set.

Normal output: (set value) - (Current display value) Reverse output: (Current display value) - (set value)

If the calculation result becomes 0 or less, [Err] is displayed on the sub display (right) and the set value is not changed.

Afterwards, it is possible to adjust the value by pressing the UP or DOWN button.

○Peak/bottom value indication

The maximum (minimum) pressure on the SUP port side when the power is supplied is detected and updated.
In peak/bottom indication mode, the current pressure is displayed.
Press the UP or DOWN button in measurement mode to switch the sub-display (left) to the display shown below.

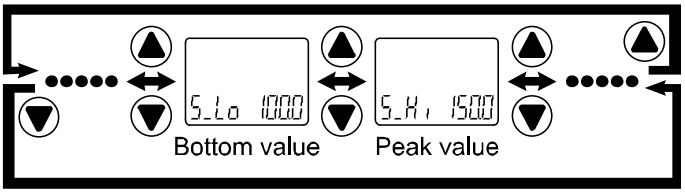

When the SET and DOWN buttons are pressed for 1 second or longer simultaneously while the peak/bottom values are displayed, the sub display (right) displays [- - -] and the maximum (minimum) pressure value are cleared.

○Zero-clear function

The displayed value can be adjusted to zero if the pressure being measured is within ±7%F.S of the zero point set at the time of default settings.
(The zero clear range varies by ±1%F.S. due to variation between individual products.)
When the SUP port side pressure or OUT port side pressure is displayed on the sub display, if the SET and DOWN buttons are pressed for 1 second or longer simultaneously under atmospheric pressure, the main display shows [- - -] and the display value is reset to zero.

○Key-lock function

The key-lock function is used to prevent errors occurring due to unintentional changes of the set values. If the SET button is pressed while the keys are locked, [LoC] is displayed on the sub display (left) for approximately 1 second.
(Each setting and peak/bottom values are displayed with UP and DOWN buttons.)

<Operation - Without security code input ->

(1) Press the SET button for 5 seconds or longer in measurement mode. When [oPE] is displayed on the main display, release the button.
The current setting [LoC] or [UnLoC] will be displayed on the sub display.
(To release key-lock repeat the above operation.)

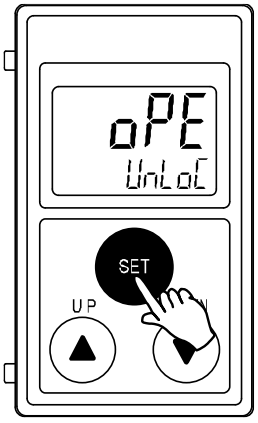

(2) Select the key-locking/un-locking with UP or DOWN button, and press the SET button to set.

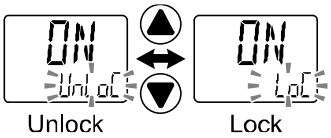

<Operation – With security code input ->

•Locking

(1) Press the SET button for 5 seconds or longer in measurement mode. When [oPE] is displayed on the main display, release the button.
The current setting [LoC] or [UnLoC] will be displayed on the sub display.

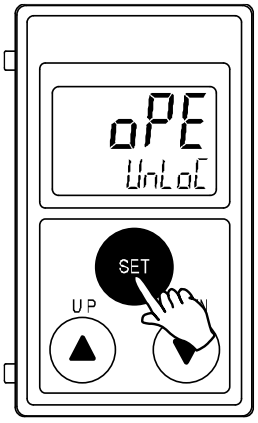

(2) Select the key [LoC] with UP or DOWN button, and press the SET button to set.

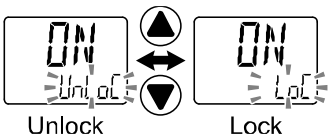

•Unlocking

(1) Press the SET button for 5 seconds or longer in measurement mode. When [oPE] is displayed on the main display, release the button.
The current setting [LoC] or [UnLoC] will be displayed on the sub display.

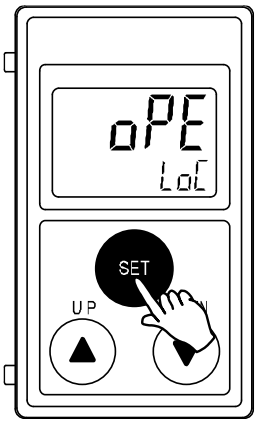

(2) Select the un-locking [UnLoC] with UP or DOWN button. Setting is recognized by pressing the SET button, then security code is required.

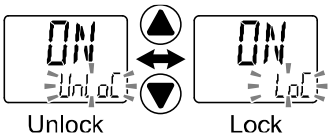

(3) For instructions on how to enter the security code, refer to "How to input and change the security code" on page 90.

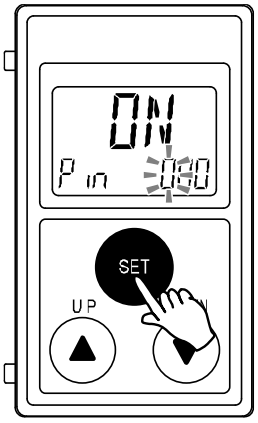

(4) If inputted security code is correct, the indication of the main display changes to [UnLoC], and pressing the one of UP, SET or DOWN button releases key-lock and the measurement mode returns.
If the security code entered is incorrect, [FAL] will be displayed, and the security code must be entered again. If the wrong security code is entered 3 times, [LoC] is displayed and the device returns to measurement mode.

●**How to input and change the security code**

The left most digit starts flashing.
Press the UP or DOWN button to select a value.
Press the SET button to make the next digit to the right flash.
(If the SET button is pressed at the last digit, the first digit will start flashing.)

After the setting is complete, Press and hold the SET button for 1 second or longer.
(If an operation is not performed for 30 seconds during input or change of the security code, it will return to measurement mode.)

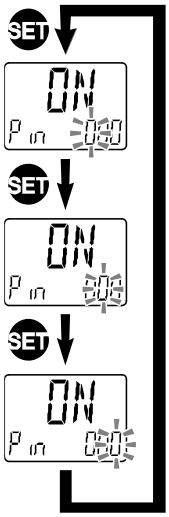

IO-Link Specifications

■Outline of IO-Link functions

○Communication function

This product can check the distance measurement display value (guideline), the pressure measurement value, diagnostic information and switch output status using cyclic data communication via the IO-Link system.

○Product status monitoring function

This function monitors the product status via the IO-Link communication.
•Detects the error status (internal hardware error, OUT2 short-circuit).
•Detects the warning conditions (product internal temperature error, measurement pressure error).

○Data storage function

The Data storage function stores the IO-Link device parameter settings to the IO-Link master.
With the IO-Link data storage function, the IO-Link device can be replaced easily without re-setting the equipment construction or setting parameters
When the device parameters are set and downloaded to the device using the IO-Link setting tool, the parameters in the downloaded device will be activated.
After that, these parameters are uploaded to the data storage in the master by stem command (back-up communication command).
When the device is replaced with the same type of IO-Link device due to failure, the parameter settings stored in the master are downloaded automatically, device can be operated with the parameter settings of the previous device.
Device parameter setting is applicable to 3 types of back-up levels of the master setting ("Inactive", "back-up/Restore", "Restore").
"Back-up" implies the activation of upload and "restore" implies download.

■Communication specifications

IO-Link type	Device
IO-Link version	V1.1
Communication speed	COM2 (38.4 kbps)
Min. cycle time	4.2 ms
Process data length	Input Data: 8 byte, Output Data: 0 byte
On request data communication	Available
Data storage function	Available
Event function	Available

■Process data

Process data is the data which is exchanged periodically between the master and device.
For this product the process data consists of switch output status, error diagnostics result, distance measured (guideline) display value and pressure gauge measurement value.
(Refer to the table below.)

Bit offset	Item	Notes
0	Distance detection SW1	0: OFF 1: ON
1	Distance detection SW2	0: OFF 1: ON
2	SUP port pressure SW1	0: OFF 1: ON
3	SUP port pressure SW2	0: OFF 1: ON
4	OUT port pressure SW1	0: OFF 1: ON
5	OUT port pressure SW2	0: OFF 1: ON
8	Pressure diagnostics	0: Normal 1: Abnormal
15	Error diagnostics	0: Normal 1: Abnormal
16 to 31	OUT port pressure gauge measurement value	16 bit No flag integer
32 to 47	SUP port pressure gauge measurement value	16 bit No flag integer
48 to 63	Distance measurement (guideline) displayed value	16 bit No flag integer

Bit offset	63	62	61	60	59	58	57	56	55	54	53	52	51	50	49	48
Item	Distance measurement (guideline) display value (16 bit With flag integer)															

Bit offset	47	46	45	44	43	42	41	40	39	38	37	36	35	34	33	32
Item	SUP port pressure gauge measurement value (16 bit With flag integer)															

Bit offset	31	30	29	28	27	26	25	24	23	22	21	20	19	18	17	16
Item	SUP port pressure gauge measurement value (16 bit With flag integer)															

Bit offset	15	14	13	12	11	10	9	8	7	6	5	4	3	2	1	0
Item	Error diagnostics	0						Pressure diagnostics	0		OUT port pressure SW2	OUT port pressure SW1	SUP port pressure SW2	SUP port pressure SW1	Distance detection SW2	Distance detection SW1

•The process data of this product is Big-Endian type.
When the transmission method of the upper communication is Little-Endian, the byte order will be changed.
Refer to the table below for the Endian type of the major upper communication.

Endian type	Upper communication protocol
Big-Endian type	Such as PROFIBUS and PROFINET
Little-Endian type	Such as EtherNET/IP, EtherCAT and CC-Link IE Field

○Diagnostic information

This product can detect the device error by diagnostic bit in the process data.

Item	Content
Pressure diagnostics	When the pressure gauge measurement value (SUP side or OUT side) is below the lower display limit (-20 kPa), the diagnostic bit will be "1: ON".
Error diagnostics	Diagnostic bit will be "1: ON" when either of the following errors is generated. •Internal product malfunction •OUT2 over current •Internal product abnormal temperature

○Relationship between the process data and display value

Content	Unit	Rated pressure range	Display/settable range
SUP port pressure value/ OUT port pressure value	kPa	0.0 to 200.0	-20.0 to 220.0
	bar	0.000 to 2.000	-0.200 to 2.200
	psi	0.00 to 29.00	-2.90 to 31.9
	Process data	0 to 2000	-200 to 2200

Content	Type	Item	Display/settable range
Display value (clearance guideline)	ISA3-F	Display value	0 to 60
		Process data	0 to 3000
	ISA3-G	Display value	0 to 300
		Process data	0 to 3000
	ISA3-H	Display value	0 to 500
		Process data	0 to 2500

○Conversion formula of the process data and display value

(1) Conversion formula from the process data to the display value: Disp = a x PD + b

(2) Conversion formula from the display value to the process data: PD = (Disp – b) / a

Disp: Product display value and set value
PD: Process data measurement value
a: Inclination
b: Intercept

[Inclination and intercept according to the product type]

Type	Inclination a	Intercept b
ISA3-F	0.02	0
ISA3-G	0.1	0
ISA3-H	0.2	0

[Inclination and intercept to the unit specification]

Unit	Inclination a	Intercept b
kPa	0.1	0
bar	0.001	0
psi	0.014504	0

[Calculation example]

(1) Conversion formula from the process data to the display value (process value)
(Units specification: kPa, PD = 1000)

Disp = a x PD + b
= 0.1 x 1000 + 0
= 100.0[kPa]

(2) Conversion formula from the display value (pressure value) to the process data
(Units specification: kPa, Disp = 120.0[kPa])

PD = (Disp – b) / a
= (120.0 – 0) / 0.1
= 1200

■IO-Link parameter setting

○IODD file

IODD (I/O Device Description) is a definition file which provides all properties and parameters required for establishing functions and communication of the device.
IODD includes the main IODD file and a set of image files such as vendor logo, device picture and device icon.
The IODD file is shown below.

	Product No.	IODD file *
1	ISA3-F	SMC-ISA3-F-yyyymmdd-IODD1.1
2	ISA3-G	SMC-ISA3-G-yyyymmdd-IODD1.1
3	ISA3-H	SMC-ISA3-H-yyyymmdd-IODD1.1

∗: "yyyymmdd" indicates the file preparation date. yyyy is the year, mm is the month and dd is the date.

The IODD file can be downloaded from the SMC Web site (http://www.smcworld.com).

○Service data

The tables below indicates the parameters which can be read or written by simple access parameter (direct parameters page) and ISDU parameters which are applicable to various parameters and commands.

∗: The parameter data of this product is the Big Endian type.
When the transmission method of the upper communication is Little-Endian, the byte order will be changed.

●Direct parameters page 1

DPP1 address	Access	Parameter name	Initial value (dec)	Contents
0x07	R	Vendor ID	0x0083(131)	“SMC Corporation”
0x08				
0x09	R	Device ID	0x0155(341) 0x0156(342) 0x0157(343)	“ISA3-F∗L-∗” “ISA3-G∗L-∗” “ISA3-H∗L-∗”
0x0A				
0x0B				

●ISDU parameters

Index (dec)	Sub index	Access *1	Parameters	Initial value	Remarks
0x0002 (2)	0	W	System command	–	Refer to "System command" on page 97.
0x000C (12)	0	R/W	Device access lock	0x0000	Refer to "Device access lock parameter" on page 98.
0x0010 (16)	0	R	Vendor name	SMC Corporation	
0x0011 (17)	0	R	Vendor text	www.smcworld.com	
0x0012 (18)	0	R	Product name	Example ISA3-GCL	
0x0013 (19)	0	R	Product ID	Example ISA3-GCL	
0x0014 (20)	0	R	Product text	GAP CHECKER	
0x0015 (21)	0	R	Serial number	Example: "xxxxxxxx"	•Initial value is indicated as 8-digit. •16 octets fixed character string
0x0016 (22)	0	R	Hardware version	HW-Vx.y	x: Large revision number y: Small revision number
0x0017 (23)	0	R	Software version	FW-Vx.y	x: Large revision number y: Small revision number
0x0024 (36)	0	R	Device status parameter	–	Refer to "Device state parameters" on page 98.
0x0025 (37)	0	R	Device detailed state parameter	–	Refer to "Device detail status parameters" on page 98.
0x0028 (40)	0	R	Process data input	–	The latest value of process data can be read.

*1: R: Read, W: Wright

●System command (index 2)
In the ISDU index 0x002 SystemCommand (system command), the command shown in the table below will be issued.
The button of each system command is displayed on the IO-Link setting tool (excluding "ParamDownloadStore").
Click the button to send the system command to the product.
Writable commands are shown below.
Data type: 8 bit UInteger

Value (dec)	Command name	Description
0x80 (128)	Device Reset	Restarts the device
0x81 (129)	Application Reset	Clear the peak/bottom value of the SUP port pressure
0x82 (130)	Restore Factory Settings	Initialize the set value to the default value
0xA0 (160)	All Zero Clear	Conduct a zero-clear of the pressure value
0xF4 (244)	Calibration	Conduct calibration
0xF5 (245)	Calibration Clear	Initialize the calibration status
0xF6 (246)	Calibration With +0.1%	Increase the fine adjustment rate by 0.1%
0xF7 (247)	Calibration With -0.1%	Decrease the fine adjustment rate by 0.1%

●Device access lock parameter (index 12)
The contents are as follows.
Data type: 16 bit Record

Value	Contents
0	Key lock release, DS unlock (Initial value)
2	Key lock release, DS lock
8	Key lock, DS unlock
10	Key lock, DS lock

[Key lock]
This function prevents the user from physically changing the setting of the pressure switch (button operation is not accepted).
Even when key lock function is activated, settings can be changed by IO-Link communication.
Restoration by data storage (overwriting parameter data) can be performed.

[Lock data storage (DS lock)]
Locking "Data storage" will invalidate the data storage function of the pressure switch.
In this case, access will be denied for backup and restoration of data storage.

●Device state parameters (index 36)
Readable device states are as follows.
Data type: 8 bit UInteger

Value	State definition	Description
0	Normal operation	-
1	Maintenance inspection required	Not available
2	Outside specification range	Less than the lower limit of the pressure measurement range
3	Function check	Not available
4	Failure	Internal failure of digital pressure switch

●Device detail status parameters (index 37)
Detailed event contents of readable device status are as follows.

Array	Event content	Event classification		Event code
		Definition	Value	
1	Internal failure of digital pressure switch	Error	0xF4	0x8D01
2	Internal failure of digital pressure switch	Error	0xF4	0x8D07
3	Internal failure of digital pressure switch	Error	0xF4	0x8D02
4	Internal failure of digital pressure switch	Error	0xF4	0x8D03
5	Internal failure of digital pressure switch	Error	0xF4	0x8D04
6	Internal failure of digital pressure switch	Error	0xF4	0x8D05
7	Internal failure of digital pressure switch	Error	0xF4	0x8D06
8	Pressure sensor error	Error	0xF4	0x8CD0
9	Short circuit of OUT2 output terminal	Error	0xF4	0x8CC0
10	Temperature sensor error	Error	0xF4	0x8CD1
11	Below the SUP port minimum pressure range	warning	0xE4	0x8D71
12	Below the OUT port minimum pressure range	warning	0xE4	0x8D72
13	Test event A	warning	0xE4	0x8CA0
14	Test event B	warning	0xE4	0x8CA1
15	Data storage upload request	notification	0x54	0xFF91

●Product individual parameters

Index dec	Index hex	Sub index	Access *1	Items		Data type *2	Initial value	Data storage *3	Set value	Remarks
1000	0X03E8	0	R/W	Display unit		U8	0	Y	0: kPa 1: bAr 2: psi	Setting of display unit
1010	0X03F2	0	R/W	Display colour		U8	2	Y	0: red 1: Grn 2: 1SoG 3: 1Sor 4: 2SoG 5: 2Sor	Setting of display colour
1020	0X03FC	0	R/W	SW output PNP/NPN selection		U8	1	Y	0: nPn 1: PnP	Setting of switch output specification
1400	0X0578	0	R/W	OUT2 hardware output		U8	2	Y	0: Distance 1: SUP port pressure 2: OUT port pressure 3: Other	
1210	0X04BA	1	R/W	Distance (OUT1)	Output mode	U8	0	Y	0: HYS 1: Wind	Setting of OUT1 output mode
		2	R/W		Output style	U8	1	Y	0: Normal output 1: Reverse output	Setting of OUT1 output normal and reserved output
1220	0X04C4	1	R/W		HYS mode set value	S16	Refer to Table "SW output default value".	Y	Refer to "Distance measurement value set range".	Setting of OUT1 output set value
		2	R/W		HYS mode hysteresis	S16		Y		Setting of OUT1 hysteresis
		3	R/W		Wind mode lower limit set value	S16		Y		Setting of OUT1 output set value (lower limit of window comparator)
		4	R/W		Wind mode upper limit set value	S16		Y		Setting of OUT1 output set value (upper limit of window comparator)
		5	R/W		Wind mode hysteresis	S16		Y		Setting of OUT1 hysteresis (window comparator hysteresis)
1410	0X0582	1	R/W	Distance (OUT2)	Output mode	U8	0	Y	0: HYS 1: Wind	Setting of OUT2 output mode
		2	R/W		Output style	U8	1	Y	0: Normal output 1: Reverse output	Setting of OUT2 output normal and reversed output
1420	0X058C	1	R/W		HYS mode set value	S16	Refer to Table "SW output default value".	Y	Refer to "Distance measurement value set range".	Setting of OUT2 output set value
		2	R/W		HYS mode hysteresis	S16		Y		Setting of OUT2 hysteresis
		3	R/W		Wind mode lower limit set value	S16		Y		Setting of OUT2 output set value (lower limit of window comparator)
		4	R/W		Wind mode upper limit set value	S16		Y		Setting of OUT2 output set value (upper limit of window comparator)
		5	R/W		Wind mode hysteresis	S16		Y		Setting of OUT2 hysteresis (window comparator hysteresis)

●Product individual parameters (continued)

Index dec	Index hex	Sub index	Access *1	Items		Data type *2	Initial value	Data storage *3	Set value	Remarks
1230	0X04CE	1	R/W	SUP port pressure (OUT1)	Output mode	U8	0	Y	0: HYS 1: Wind	Setting of OUT1 output mode
		2	R/W		Output type	U8	0	Y	0: Normal output 1: Reverse output	Setting of OUT1 output normal and reserved output
1240	0X04D8	1	R/W		HYS mode set value	S16	1000	Y	-200 ~ 2200	Setting of OUT1 output set value
		2	R/W		HYS mode hysteresis	S16	200	Y	0 ~ 2400	Setting of OUT1 hysteresis
		3	R/W		Wind mode lower limit set value	S16	1000	Y	-200 ~ 2200	Setting of OUT1 output set value (lower limit of window comparator)
		4	R/W		Wind mode upper limit set value	S16	2000	Y	-200 ~ 2200	Setting of OUT1 output set value (upper limit of window comparator)
		5	R/W		Wind mode hysteresis	S16	200	Y	0 ~ 1200	Setting of OUT1 hysteresis (window comparator hysteresis)
		6	R/W		ON delay time	U16	0	Y	0 ~ 6000	Setting of OUT1 delay time at ON 0.01 s increment (0 to 60 s)
		7	R/W		OFF delay time	U16	0	Y	0 ~ 6000	Setting of OUT1 delay time at OFF 0.01 s increment (0 to 60 s)
1430	0X0596	1	R/W	SUP port pressure (OUT2)	Output mode	U8	0	Y	0: HYS 1: Wind	Setting of OUT2 output mode
		2	R/W		Output type	U8	0	Y	0: Normal output 1: Reverse output	Setting of OUT2 output normal and reversed output
1440	0X05A0	1	R/W		HYS mode set value	S16	1000	Y	-200 ~ 2200	Setting of OUT2 output set value
		2	R/W		HYS mode hysteresis	S16	200	Y	0 ~ 2400	Setting of OUT2 hysteresis
		3	R/W		Wind mode lower limit set value	S16	1000	Y	-200 ~ 2200	Setting of OUT2 output set value (lower limit of window comparator)
		4	R/W		Wind mode upper limit set value	S16	2000	Y	-200 ~ 2200	Setting of OUT2 output set value (upper limit of window comparator)
		5	R/W		Wind mode hysteresis	S16	200	Y	0 ~ 1200	Setting of OUT2 hysteresis (window comparator hysteresis)
		6	R/W		Delay time ON	U16	0	Y	0 ~ 6000	Setting of OUT1 delay time at ON 0.01 s increment (0 to 60 s)
		7	R/W		Delay time OFF	U16	0	Y	0 ~ 6000	Setting of OUT1 delay time at OFF 0.01 s increment (0 to 60 s)

●Product individual parameters (continued)

Index dec	Index hex	Sub index	Access *1	Items		Data type *2	Initial value	Data storage *3	Set value	Remarks
1250	0X04E2	1	R/W	OUT port pressure (OUT1)	Output mode	U8	1	Y	0: HYS 1: Wind	Setting of OUT1 output mode
		2	R/W		Output type	U8	0	Y	0: Normal output 1: Reverse output	Setting of OUT1 output normal and reserved output
1260	0X04EC	1	R/W		HYS mode set value	S16	300	Y	-200 ~ 2200	Setting of OUT1 output set value
		2	R/W		HYS mode hysteresis	S16	50	Y	0 ~ 2400	Setting of OUT1 hysteresis
		3	R/W		Wind mode lower limit set value	S16	250	Y	-200 ~ 2200	Setting of OUT1 output set value (lower limit of window comparator)
		4	R/W		Wind mode upper limit set value	S16	500	Y	-200 ~ 2200	Setting of OUT1 output set value (upper limit of window comparator)
		5	R/W		Wind mode hysteresis	S16	50	Y	0 ~ 1200	Setting of OUT1 hysteresis (window comparator hysteresis)
		6	R/W		ON delay time	U16	100	Y	0 ~ 6000	Setting of OUT1 delay time at ON 0.01 s increment (0 to 60 s)
		7	R/W		OFF delay time	U16	100	Y	0 ~ 6000	Setting of OUT1 delay time at OFF 0.01 s increment (0 to 60 s)
1450	0X05AA	1	R/W	OUT port pressure (OUT2)	Output mode	U8	1	Y	0: HYS 1: Wind	Setting of OUT2 output mode
		2	R/W		Output type	U8	0	Y	0: Normal output 1: Reverse output	Setting of OUT2 output normal and reversed output
1460	0X05B4	1	R/W		HYS mode set value	S16	300	Y	-200 ~ 2200	Setting of OUT2 output set value
		2	R/W		HYS mode hysteresis	S16	50	Y	0 ~ 2400	Setting of OUT2 hysteresis
		3	R/W		Wind mode lower limit set value	S16	250	Y	-200 ~ 2200	Setting of OUT2 output set value (lower limit of window comparator)
		4	R/W		Wind mode upper limit set value	S16	500	Y	-200 ~ 2200	Setting of OUT2 output set value (upper limit of window comparator)
		5	R/W		Wind mode hysteresis	S16	50	Y	0 ~ 1200	Setting of OUT2 hysteresis (window comparator hysteresis)
		6	R/W		Delay time ON	U16	100	Y	0 ~ 6000	Setting of OUT1 delay time at ON 0.01 s increment (0 to 60 s)
		7	R/W		Delay time OFF	U16	100	Y	0 ~ 6000	Setting of OUT1 delay time at OFF 0.01 s increment (0 to 60 s)
1470	0X05BE	1	R/W	Other output (OUT2)	Output mode	U8	2	Y	2: Err 3: OFF	Selection of output mode when the OUT2 hardware output is set to "others"
		2	R/W		Output type	U8	0	Y	0: Normal output 1: Reverse output	

●Product individual parameters (continued)

Index dec	Index hex	Sub index	Access *1	Items		Data type *2	Initial value	Data storage *3	Set value	Remarks
5000	0X1388	0	R/W	Display fine adjustment rate	Distance	S16	0	N	-200 ~ 200	0.1% increments (-20% to 20%)
2000	0X07D0	1	R/W	SUB display	SUB display default selection	U8	0	Y	0: std 1: dUAL (2 value display) 2: LinE (Line name) 3: OFF (No display)	
		2	R/W		Selection of display items during std setting	U8	0	Y	Refer to Table "Selection of display items during std setting".	
		3	R/W		Selection of the left display items during 2 value setting	U8	3	Y	Refer to Table "2 value display communication data".	
		4	R/W		Selection of the right display items during 2 value setting	U8	4	Y		
2030	0X07EE	0	R/W	Zero cut-off setting		U8	F type: 0 G type: 6 H type: 10	Y	0 ~ 10	Display value around 0 is displayed as 0. 1% increments
2420	0X0974	1	R/W	LINE name	1st letter (11seg) (Left side)	U8	0	Y	Refer to Figure "Line name communication data".	
		2	R/W		2nd letter	U8	0	Y		
		3	R/W		3rd letter	U8	0	Y		
		4	R/W		4th letter	U8	0	Y		
		5	R/W		5 th letter	U8	0	Y		
		6	R/W		6 th letter (11seg)	U8	0	Y		
		7	R/W		7 th letter (11seg)	U8	0	Y		
		8	R/W		8 th letter	U8	0	Y		
		9	R/W		9 th letter	U8	0	Y		
2430	0X097E	1	R/W		1st dot (left side)	U8	0	Y	0: OFF (dot OFF) 1: ON (dot ON)	
		2	R/W		2nd dot	U8	0	Y		
		3	R/W		3rd dot	U8	0	Y		
		4	R/W		4th dot	U8	0	Y		
		5	R/W		5th dot	U8	0	Y		
		6	R/W		6th dot	U8	0	Y		
		7	R/W		7th dot	U8	0	Y		
		8	R/W		8th dot	U8	0	Y		

●Product individual parameters (continued)

Index dec	Index hex	Sub index	Access *1	Items				Data type *2	Initial value	Data storage *3	Set value	Remarks
2400	0X0960	0	R/W	Display OFF mode				U8	0	Y	0: Display ON 1: Display OFF	Display OFF mode setting
2410	0X096A	1	R/W	Security code	Use or unuse			U8	0	Y	0: Unused 1: Used	Setting of use or unuse of the security code
		2	R/W	Security code	Security code			U16	0	Y	0 ~ 999	Setting of security code
8200	0X2008	0	R	Measurement related	Pressure	Conversion equation	Inclination a	F32	Refer to "Pressure measurement value set range".	N	Refer to "Pressure measurement value set range".	
8210	0X2012	0	R				Intercept b	F32		N		
8220	0X201C	0	R			SUP port peak value		S16	0	N		
8230	0X2026	0	R			SUP port bottom value		S16	0	N		
8000	0X1F40	0	R		Distance	Conversion equation	Inclination a	F32	Refer to "Distance measurement value set range".	N	Refer to "Distance measurement value set range".	
8010	0X1F4A	0	R				Intercept b	F32		N		

∗1: "R" means Read and "W" means Write.

∗2: Refer to the table below for the symbol.

Symbol	Data type (IO-Link standard)	Data length Bit[byte]	Description
U8	UIntegerT	8 [1]	Unsigned integer
U16		16 [2]	
S16	IntegerT	16 [2]	Signed integer
F32	Float32T	32 [4]	Floating point number

∗3: It is possible to upload or download "Y", but not "N".

Table "SW output default value"

Product type	HYS		WIND		
	P_*	H_*	P*L	P*H	H*
F type	1000	150	450	900	150
G type	500	200			
H type	250	100			

Table "Distance measurement value set range"

Product type	Rated value	Display/setting range		Display/min. set unit	Conversion equation	
		Lower limit	Upper limit		Inclination a	Intercept b
F type	1500	0	3000	1	0.02	0
G type	1500	0	3000	1	0.1	0
H type	1500	0	2500	1	0.2	0

Table "Pressure measurement value set range"

Unit	Rated value	Display/setting range		Display/min. set unit	Conversion equation	
		Lower limit	Upper limit		Inclination a	Intercept b
kPa	2000	-200	2200	1	0.1	0
bar	2000	-200	2200	1	0.001	0
Psi	2000	-200	2200	1	0.014504	0

Table "Selection of display items during std setting"

Value	Setting content		Remark
0	OUT1 level bar display		
1	Distance measurement value		
2	SUP port pressure gauge measurement value		
3	OUT port pressure gauge measurement value		
4	OUT1 Set value display	Distance HYS switch point	
5		Distance HYS hysteresis	
6		Distance WIND lower switch point	
7		Distance WIND upper switch point	
8		Distance WIND hysteresis	
9	OUT2 Set value display	Distance HYS switch point *1	
10		Distance HYS hysteresis *1	
11		Distance WIND lower switch point *1	
12		Distance WIND upper switch point *1	
13		Distance WIND hysteresis *1	
14		SUP port pressure HYS switch point *1	
15		SUP port pressure HYS hysteresis *1	
16		SUP port pressure WIND lower switch point *1	
17		SUP port pressure WIND upper switch point *1	
18		SUP port pressure WIND hysteresis *1	
19		OUT port pressure HYS switch point *1	
20		OUT port pressure HYS hysteresis *1	
21		SUP port pressure WIND lower switch point *1	
22		SUP port pressure WIND upper switch point *1	
23		OUT port pressure WIND hysteresis *1	
24		Err	
25		oFF	
26	SUP port pressure bottom measurement display		
27	SUP port pressure peak measurement display		
28	IO-Link mode display		SIO mode/SDCI mode display
29	Option display		2 value display, line name, display OFF

*1: The set value selected for OUT2 output from Distance/Inlet/Outlet is displayed in the lower screen.

Table "2 value display communication data"

Value	Setting content		Selection of display items during 2 value setting	
			Left side	Right side
0	Distance measurement value		●	●
1	SUP port pressure gauge measurement value		●	●
2	OUT port pressure gauge measurement value		●	●
3	OUT1 Set value display	Distance HYS switch point	●	●
4		Distance HYS hysteresis	●	●
5		Distance WIND lower switch point	●	●
6		Distance WIND upper switch point	●	●
7		Distance WIND hysteresis	●	●
8	OUT2 Set value display	Distance HYS switch point	●	●
9		Distance HYS hysteresis	●	●
10		Distance WIND lower switch point	●	●
11		Distance WIND upper switch point	●	●
12		Distance WIND hysteresis	●	●
13		SUP port pressure HYS switch point	●	●
14		SUP port pressure HYS hysteresis	●	●
15		SUP port pressure WIND lower switch point	●	●
16		SUP port pressure WIND upper switch point	●	●
17		SUP port pressure WIND hysteresis	●	●
18		SUP port pressure HYS switch point	●	●
19		OUT port pressure HYS hysteresis	●	●
20		OUT port pressure WIND lower switch point	●	●
21		OUT port pressure WIND upper switch point	●	●
22		OUT port pressure WIND hysteresis	●	●
23	SUP port pressure peak measurement display		●	×
24	SUP port pressure bottom measurement display		×	●
25	Display units		●	●
26	OUT1 operation mode display		●	×
27	OUT2 operation mode display		×	●
28	NPN/PNP output		●	●
29	Line name (Left side 4 digits, right side 5 digits)		●	●
30	Display OFF (No display)		●	●

●: Settable ×: Not settable (negative acknowledge)

Fig. "Line name communication data"

Value (16 decimal number)		00	01	02	03	04	05	06	07	08	09	0A	0B	0C	0D	0E	0F
Display digit	7 seg	A	b	C	d	E	F	G	H	I	J	P	L	n	n	o	P
	11 seg											K		M	n		
Value (16 decimal number)		10	11	12	13	14	15	16	17	18	19	1A	1B	1C	1D	1E	1F
Display digit	7 seg	-	r	S	t	U	u	u	-	y	-	0	1	2	3	4	5
	11 seg	n	r				u	M	x		Z						
Value (16 decimal number)		20	21	22	23	24	25	26	27	28	29	2A	2B	2C	2D	2E	2F
Display digit	7 seg	6	7	8	9	_	-	-	-	-	-	-	-	-	-	-	
	11 seg								/	x	Y	n	N	A	V	u	
Remark		The value of - cannot be displayed															

Maintenance

Nozzle Cleaning

The OUT port orifice can be removed for cleaning by removing the retaining screw.
Flush inside the orifice with air or wipe off foreign matter with a soft clean cloth. Correct detection may not be possible if the orifice is dirty or scratched.

(1) Remove the screw (2 pcs.) at the side of the OUT port.
(2) Remove the OUT port with a flat head screw driver as shown in the figure below. Take care to keep the direction of removal straight.
(3) Remove the O-ring from the orifice for cleaning. Clean the orifice.

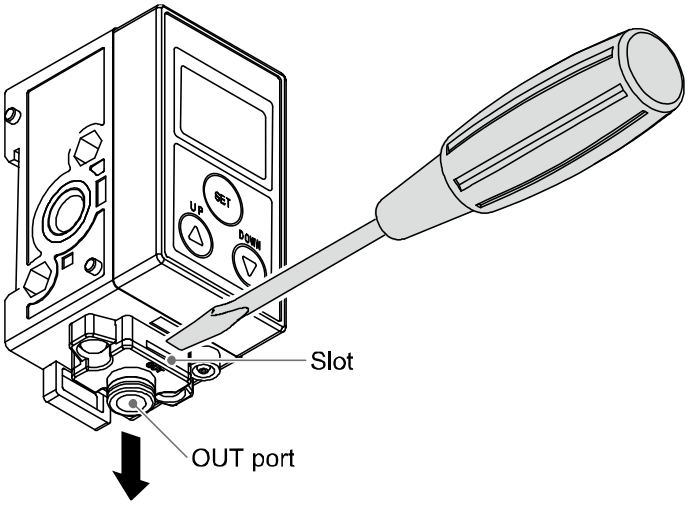

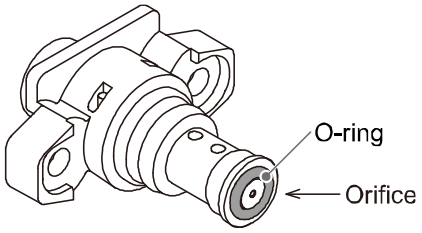

(4) Place the O-ring back into the orifice.
(5) Ensure correct orientation of the OUT port, and insert it straight into the body.

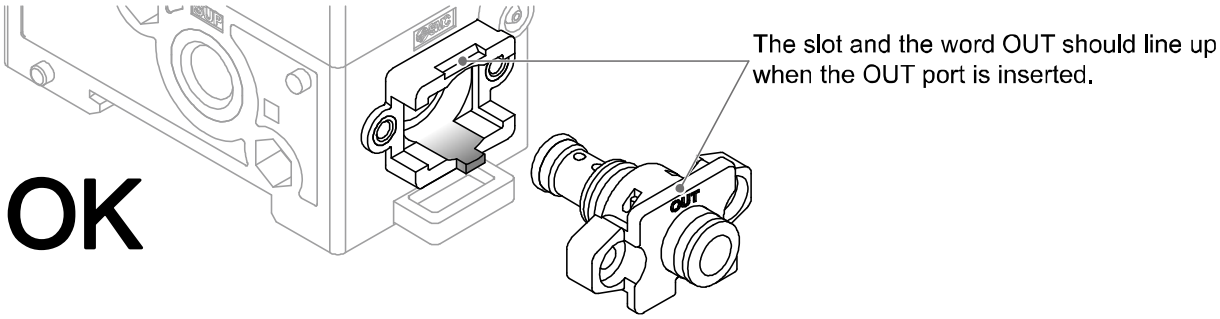

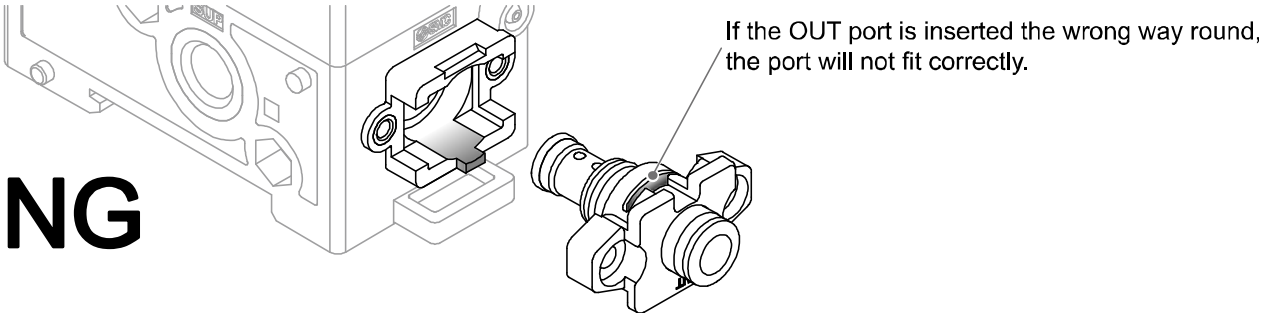

(6) Tighten the screws on the OUT port side. (Tightening torque: 0.3 Nm).

∗: If the orifice is taken out, perform set-up again.

Forgotten the security code

Use the procedure below when the security code has been forgotten.

<Operation>

Press the SET button for 5 seconds or longer in measurement mode. When [oPE] is displayed on the main display, release the button.
The current setting [LoC] or [UnLoC] will be displayed on the sub display.

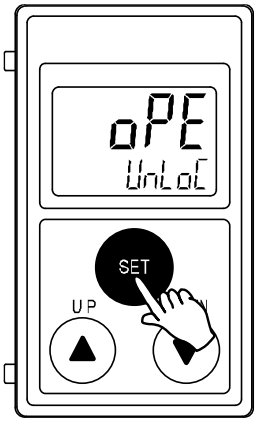

Press the UP and DOWN buttons simultaneously for 5 second or longer.
Press the SET and DOWN buttons simultaneously for 5 second or longer.

∗: Display is not changed.

(If another operation is performed or no operation is performed for 30 seconds, the display will return to measurement mode.)

Press the UP and SET buttons simultaneously for 5 second or longer.
Security code is displayed, and the security code change mode is available.
(If an operation is not performed for 30 seconds, the display will return to measurement mode.)

Decide on the security code referring to "How to input and change the security code" on page 90.

When input is completed, the selected security code flashes.
After checking the security code is as required, press the SET button.
Return to measurement mode.
At this time, if the UP or DOWN buttons are pressed, any security code changes are lost, and the change of security code must be repeated.

Troubleshooting

If an operation failure of the product occurs, please confirm the cause of the failure from the following table.
If a cause applicable to the failure cannot be identified and normal operation can be recovered by replacement with a new product, this indicates that the product itself was faulty.
Problems with the product may be due to the operating environment (installation etc). Please consult SMC.

○Cross-reference for troubleshooting

Fault	Possible cause	Countermeasures
Output does not turn ON	Supply pressure error	Supply rated pressure. (100 kPa to 200 kPa)
	Setting is not correct	Perform setting correctly. (Refer to page 44)
	Air leakage	Connect piping correctly and eliminate any air leakage.
Output stays ON (Does not turn OFF)	Setting is not correct	Perform setting correctly. (Refer to page 44)
	Clogged piping	Apply pressure lower than the withstand pressure to eliminate the cause of clogging of piping.
The indicator LED operates correctly. Output does not turn ON	Incorrect wiring	Connect wires correctly. (Refer to page 36)
	Output specification setting error	Check if the output specification (NPN/PNP) is correct.
The Gap cannot be detected correctly.	Incorrect supply pressure	Supply rated pressure. (100 kPa to 200 kPa)
	Nozzle shape is not correct	Correct the nozzle shape. (Refer to page 29)
	Multiple detection nozzles are used	Do not use multiple detection nozzles with one product. If multiple nozzles are to be used, please test them on the actual equipment. It is necessary for the user to verify correct operation.
	Equipment or fittings causing leakage or resistance are used	Do not use equipment or fittings that may leak or obstruct the air flow between the product and the detection nozzle.
	The product is not higher than the detection nozzle	The product should be positioned higher than the detection nozzle.

If the troubleshooting of ISA3 does not solve the problems, it is possible that the regulator or 2 port solenoid valve has problems. Take appropriate corrective action by referring the troubleshooting for the regulator and 2 port solenoid valve.

○Troubleshooting (IO-Link communication function)

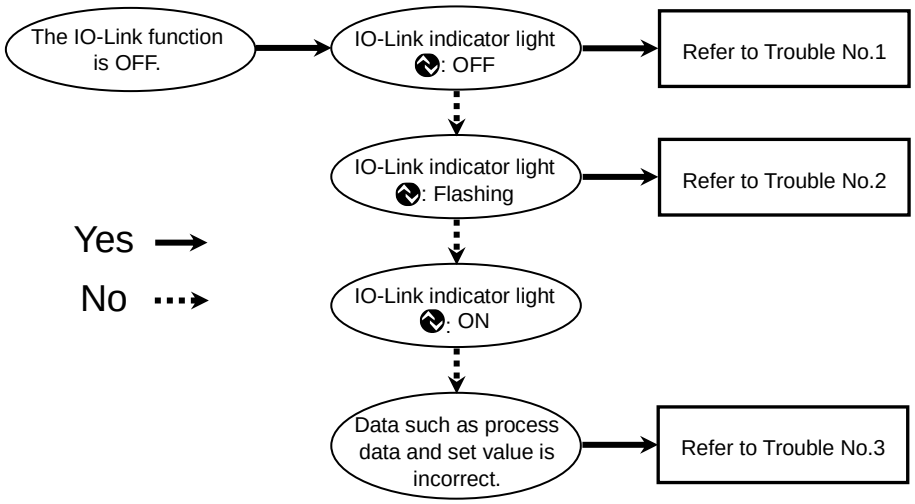

○Troubleshooting list (IO-Link communication)

Problem No.	Problem	Mode display	Problem possible causes	Investigation method	Countermeasures
1	IO-Link indicator light : OFF (Communication is not established)	ModE SIO	Communication cable is connected incorrectly or broken	Check the connection of the IO-Link cable.	Correct the cable wiring. (Replace the cable if it is broken.)
			Incorrect master setting	Check the setting condition of the master such as the port setting.	Correct the setting.
2	IO-Link indicator light : Flashing (Communication disconnected)	ModE ****	IO-Link wiring failure	Check the connection of the IO-Link cable.	Correct the cable connection. (Replace the cable if it is broken.)
		Er 15 V 10	IO-Link master and product version are not matched	Check the IO-Link version of the master and device.	Align the master IO-Link version to the device. *1
		ModE StrE ModE PrE	Information of the master and device is not consistent	Check that the product Number, ID and IODD file are consistent.	Connect the correct product.
		ModE LoC	Communication error occurs during the data storage lock	Check the data storage lock.	Release the data storage lock.
3	IO-Link indicator light : ON (Communication is being established)	-	Data is swapped by byte	Check that the Endian type on the master upper level communication transmission format is Big Endian type or Little Endian type.	Assign the program data based on the Endian type of the transmission format of the master upper level communication. (Refer to page 92 for the Endian type of the upper level communication.)

*1: When the product is connected to the master with version "V1.0", error Er15 is generated.

■Error indication

Main display	Error Name	Description	Measures
- - - -	Supply pressure error	Displayed when supply pressure is not in the range 80 kPa to 220 kPa. Measurement is not possible.	Supply 100 kPa to 200 kPa in the rated pressure range.
- - - -	Display value outside of the displayable range (Switch point setting mode)	Position of the workpiece exceeds the display range.	Move the workpiece closer to the detection nozzle.
Er 1 oC1	OUT1 over current error	The switch output (OUT1) load current has exceeded 80 mA.	Turn the power OFF and remove the cause of the over current. Then turn the power ON again.
Er 2 oC2	OUT2 over current error	The switch output (OUT2) load current has exceeded 80 mA.	Turn the power OFF and remove the cause of the over current. Then turn the power ON again.
Er 3 zero	Zero clear error	Zero clear was performed in non-atmospheric pressure (Pressure outside of ±14 kPa was supplied present.)	Perform zero clear at atmospheric pressure.
Er30 FSCC	Pressure adjustment error during calibration	Fine adjustment of the pressure display at the OUT port was not performed correctly during calibration. (When the pressure after the adjustment is below the supply pressure lower limit (80 kPa) or exceeds the display set range upper limit (220 kPa)).	Keep the SUP port pressure and OUT port pressure the same and perform fine adjustment of the pressure display value. Set the pressure within 80 kPa to 220 kPa.
Er 0 Er 4 ~ Er 9 Er40	System error	An internal data error has occurred.	Turn the power OFF and turn it ON again.
Er 15 V10	Version does not match	Version of master and IO-Link does not match. Mismatch because master version is 1.0.	Align the master IO-Link version to the device.
Sub display	**Error Name**	**Description**	**Measures**
HHH	Supply pressure error (When pressure is displayed on the sub display)	Pressure exceeding 220 kPa is supplied.	Keep the supply pressure within the display range of -20 kPa to 220 kPa.
LLL		Vacuum pressure (Below -20 kPa) is supplied.	

■Relationship between supply pressure and display

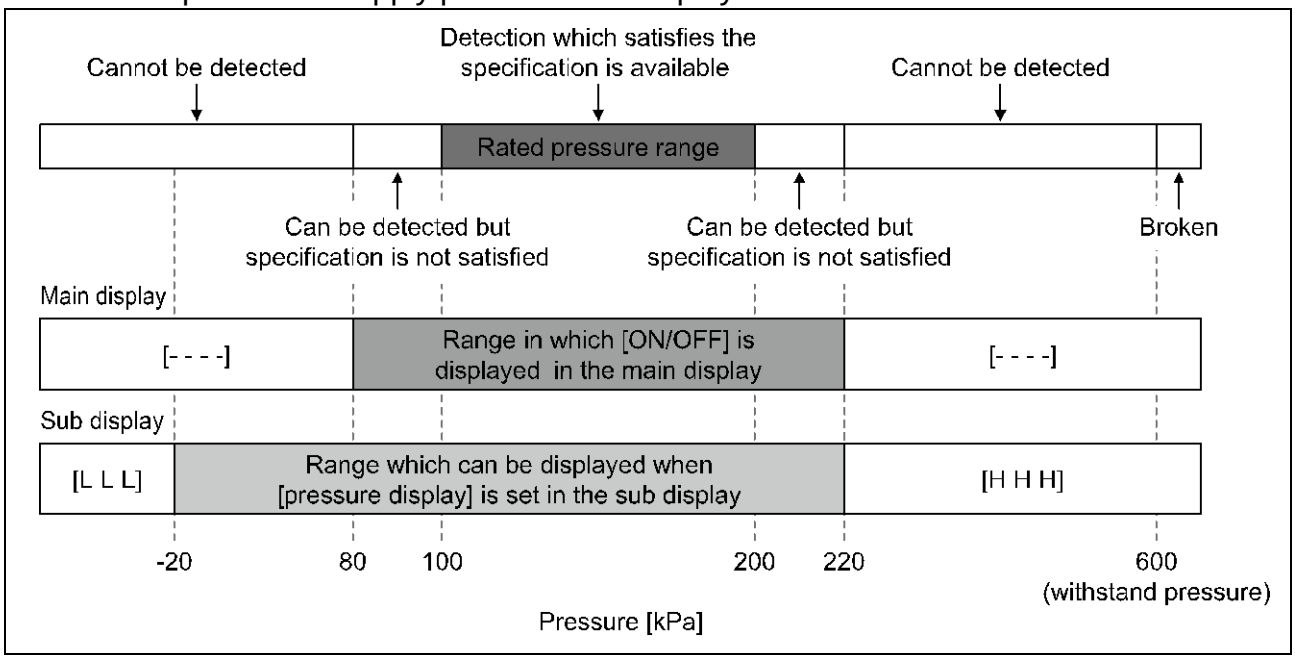

Revision history
A: Contents revised in several places. [September 2020]

SMC Corporation
4-14-1, Sotokanda, Chiyoda-ku, Tokyo 101-0021 JAPAN
Tel: + 81 3 5207 8249 Fax: +81 3 5298 5362
URL https://www.smcworld.com

No.PS※※-OMW0009-A